FIELD MAINTENANCE PRINT SET

TABLE OF CONTENTS

UNIT VARIATIONS COVERED BY THIS PRINT SET
M8750 CA

KENT STATE UNIVERSITY
SMITH LABORATORY OF PHYSICS
KENT, OHIO 44242

M8750

Field Maintenance Print Set

Digital Equipment Corporation

MP01398

REV.	CODE	NUMBER	SIZE
A	TC	M8750-0-4	B

REVISIONS		
REV	A	
CHG. NO.	ML0004	
DATE	9/82	

AJR

DRB 124

USED ON OPTION/MODEL

SHEET 1 OF 1

DRN. J. VINCENT	DATE 13 SEP 82	TITLE: MOS MEMORY ARRAY
CHK'D P. Bassman	DATE 23 SEP 82	
PROJ. ENG. K. Marrazzo	DATE 5/5/82	
FIELD SERV.	DATE	

digital

SIZE	CODE	NUMBER	REV.
B	TC	M8750-0-4	A

DIST.

ML2

SIZE	CODE	NUMBER	REV
B	DD	M875Ø-Ø	H

DRAWING NO.	NO. OF SHTS.	PART NO.	DESCRIPTION	REVISIONS						
		M8750-00	MOS MEMORY ARRAY	A	B	C	D	E	E	
B-DD-M875Ø-Ø	1		MOS MEMORY ARRAY	A	B	C	D	E	F	H
D-UA-M875Ø-Ø-Ø	4		MOS MEMORY ARRAY	A	B	B	C	D	E	F
D-CS-M875Ø-Ø-1	15		MOS MEMORY ARRAY	A	A	A	A	A	A	B
K-PL-M875Ø-BA-DBP	3		PARTS LIST DATA BASE	A	B	B	C	C	D	E
K-PC-M875Ø-0-DBC	—		P. C. DESIGN DATA BASE	A	A	A	A	A	A	A
		5Ø137Ø6	ETCH BOARD	C	C	C	C	C	C	C
K-PL-M875Ø-CA-DBP	2		PARTS LIST DATA BASE	A	A	A	A	B	C	D
K-CS-M875Ø-Ø-DBS	-		CIRCUIT SCHEMATIC DATA BASE	A	A	A	A	A	A	B
A-SP-M875Ø-Ø-2	14		M8750 MOS STORAGE ARRAY	-	-	A	A	A	A	A
B-TC-M875Ø-Ø-4	1		MOS MEMORY ARRAY	—	—	—	—	A	A	A
E-EC-5013706-0-1	3		ETCH CUT DRAWING	-	-	-	-	-	-	A

NOTES: 1. Uses Etch of D-MD-5Ø137Ø6-Ø-Ø (M8728)

REVISIONS		
REV.	CHG NO.	DATE
A	INITIAL	1/81
B	MLØØ1	2/82
C	MLØØ2	6/82
D	MLØØ3	7/82
E	MLØØ4	9/82
F	SHØØ5	2/83
H	SHOO6	4/83

digital

USED ON OPTION/MODEL

DRN.	V. MANGAUDIS	21JAN81
CHK'D	G. Boesman	10MAR81
ENG.	K. Mamayek	24JUN81
PROD.	[illegible]	24JUN81

TITLE MOS MEMORY ARRAY

SIZE	CODE	NUMBER	REV.
B	DD	M875Ø-Ø	H

SHEET 1 OF 1

DRB 126

SHO

AUTOMATED BY PRTLST.3P(44)

P A R T S L I S T

LINE	ITEM	DOCUMENT NUMBER	PART NUMBER	DESCRIPTION	QTY PER VARIATION CB	CD	CH	CJ	REFERENCE DESIGNATOR
1	1	D-UA-M8750-0-0		UNIT ASSEMBLY	REF	REF	REF	REF	
2	2	D-CS-M8750-0-1		CIRCUIT SCHEMATIC	REF	REF	REF	REF	
3	3	D-MD-5013706-0-0		DRILL & ETCH DRAWING	REF	REF	REF	REF	
4	4	B-DD-M8750-0		DRAWING DIRECTORY	REF	REF	REF	REF	
5	5		5013706-00	DRILL+ETCH MEMORY	1	1	1	1	
6	6	SPARE IC		SPARE IC	1	1	1	1	E30
7	7		1001610-00	.01 MFD 50V +80-20% Z5U CER	47	47	47	47	C1-C10,C12-C16,C18,C20-C24,
								CONT	C27-C30,C32-C41,C43,C44,C46,C49,
								CONT	C51,C53-C56,C58-C60
8	8		1010274-00	.22 MFD 50V +80-20% Z5U CER	164	164	164	164	C101-C155,C11,C17,C25,C26,C42,
								CONT	C52,C47,C200-C299,C50,C57
9	9		1012084-01	8 MFD 25V +75-10% AL EL	12	12	12	12	C70-C78,C80,C82,C83
10	10		1105275-00	PIV= 60 IO=300 MA -15NS	8	8	8	8	D55-D62
11	11		1109991-00	*** THIS ITEM IS NOT USED ***	-	-	-	-	
12	12		1114384-00	LED 105MW 35MA GREEN	1	1	1	1	D49
13	13		1216988-02	HANDLE,MODULE,HEX TWO EJECTORS	1	1	1	1	
14	14		1300309-00	390.0 .25 W 5.0 % CF	1	1	1	1	R20
15	15		1300365-00	1.0 K .25 W 5.0 % CF	1	1	1	1	R22
16	16		1301317-00	10.0 .25 W 5.0 % CF	2	2	2	2	R21,R23
17	17		1301972-00	270.0 .25 W 5.0 % CF	1	1	1	1	R16
18	18		1302124-00	18.0 .25 W 5.0 % CF	2	2	2	2	R33,R38
19	19		1302177-00	47.0 K .25 W 5.0 % CF	11	11	11	11	R1-R4,R6-R8,R12-R15
20	20		1315678-00	R NETWORK 3-18 5.0 % 7PIN	13	13	13	13	R30-R32,R34-R37,R39-R44
21	21		1513265-00	3725 QUAD CORE DRIVER	1	1	1	1	E33
22	22		1910091-00	DEC 7437 AND GATE-QUAD 2IN,BU	2	2	2	2	E15,E20
23	23		1910532-00	74S00 NAND GATE-QUAD 2IN	1	1	1	1	E22
24	24		1910534-00	74S04 INVERTER GATE-HEX 1I	1	1	1	1	E11
25	25		1911676-00	74S139 DECODER-DUAL TWO-INP	1	1	1	1	E3
26	26		1912068-00	74128 DRIVER,LINE,QUAD,50	1	1	1	1	E14
27	27		1912388-00	74S02 NOR GATE-QUAD 2IN,PO	2	2	2	2	E5,E9

REVISION HISTORY			BASIC PART NO: M8750			
ENG	ECO NUMBER	REV	SECTION A OF B	DRN: R. CROUSE	DATE: 13-JAN-81	D I G I T A L
---	INITIAL	A	SECTION.VARIATION INDEX	CHK'D: P.BOSSMAN	DATE: 4-FEB-81	TITLE PARTS LIST
K.M	M8750-ML004	B	[A] CB,CD,CH,CJ			MOS MEMORY ARRAY
K.M	M8750-SH005	C	[B] CP			
K.M	M8750-SH006	D	[C]	DES.ENG: K. MAMAYEK	DATE: 13-JAN-81	
			[D]			DOCUMENT NUMBER
			[E]	RESP.ENG.: K. MAMAYEK	DATE: 13-JAN-81	SIZE CODE NUMBER REV
			[F]			
			[H]			
			[J]	MFG.ENG.: D. TAYLOR	DATE: 13-JAN-81	K PL M8750-CA-DBP D
			[K]			
			[L]			
			[M]	ASSEMBLY NUMBER: D-UA-M8750-0-0	TOP DOCUMENT NUMBER: #B-DD-M8750-0	FILE NAME: Z2111D.PLS EDIT # 4
			[N]			

AUTOMATED BY PRTLST.3P(44)

P A R T S L I S T

LINE	ITEM	DOCUMENT NUMBER	PART NUMBER	DESCRIPTION	QTY PER VARIATION CB	CD	CH	CJ	REFERENCE DESIGNATOR
28	28		1912389-00	74S08 AND GATE-QUAD 2IN,PO	1	1	1	1	E4
29	29		1912746-00	DEC 74S37 NAND GATE-QUAD 2IN	11	11	11	11	E6,E10,E16,E18,E21,E23,E24,E26,
							CONT		E28,E31,E32
30	30		1913777-00	LS240 DRIVER,LINE,OCTAL,T	10	10	10	10	E1,E2,E7,E8,E12,E13,E17,E19,E25,
							CONT		E27
31	31		2113825-01	*** THIS ITEM IS NOT USED ***	-	-	-	-	
32	32		2118467-01	8264-20 RAM 64K X1,200NS 1	-	156	-	-	E100,E101,E103-E106,E108-E251,
							CONT		E253-E256,E258,E259
33	33		2118472-01	4164-2 MOS RAM 64K X1,200	-	-	156	-	E100,E101,E103-E106,E108-E251,
							CONT		E253-E256,E258,E259
34	34		2118470-01	4864-1 MOS RAM 64K X1,200	156	-	-	-	E100,E101,E103-E106,E108-E251,
							CONT		E253-E256,E258,E259
35	35		7010918-01	DIODE STICK G652	45	45	45	45	D1-D22,D26-D48
36	36		9000024-01	EYELET,ROLLED 0.1210DX0.192	12	12	12	12	
37	37		9006968-00	SPACER,THREADED RND PHEN 4-4	4	4	4	4	
38	38		9009185-00	JUMPER, WIRE, INSULATED, BLACK B	15	15	15	15	W2-W4,W6,W8,W10,W12,W13,W15,W16,
							CONT		W18-W20,W22,W23
39	39		9009233-04	SCREW,NYLN BIND SLOT 4-	4	4	4	4	
40	40		9009321-00	LOCK TITE, SCREW LOCK, 10CC PER	4	4	4	4	
41	41		9107771-00	TUBING,TEFLON .040ID	90	90	90	90	
42	42		2117370-01	RAM,64KX1,DYNAMIC,20	-	-	-	156	E100,E101,E103-E106,E108-E251,
							CONT		E253-E256,E258,E259
43	43		2120549-01	*** THIS ITEM IS NOT USED ***	-	-	-	-	

44 NOTE: M8750-CA IS THE PRIMARY VARIATION 256K X 39 BITS SYSTEM (NOT A MODULE TYPE).
45 NOTE: M8750-CB IS A MODULE TYPE USING HITACHI 64K MOS DEVICES.
46 NOTE: M8750-CD IS A MODULE TYPE USING FUJITSU 64K MOS DEVICES.
47 NOTE: M8750-CH IS A MODULE TYPE USING NEC 64K MOS DEVICES.
48 NOTE: ALL CLASS 21 PARTS: "ELECTRO-STATIC ITEM.
49 NOTE: ITEM #41 9107771-00 IS OPTIONAL FOR FAR EAST BUILDS ONLY.
50 NOTE: M8750-CJ IS A MODULE TYPE USING MOTOROLA 64K MOS DEVICES.
51 NOTE: M8750-CP IS A MODULE TYPE USING MITSUBISHI 64K MOS DEVICES.

D	I	G	I	T	A	L	TITLE	SECTION	SIZE	CODE	DOCUMENT NUMBER	REV
							MOS MEMORY ARRAY	A OF B	K	PL	M8750-CA-DBP	D

PSC F82 2168

AUTOMATED BY PRTLST.3P(44)

P A R T S L I S T

LINE	ITEM	DOCUMENT NUMBER	PART NUMBER	DESCRIPTION	QTY PER VARIATION CP		REFERENCE DESIGNATOR
1	1	D-UA-M8750-0-0		UNIT ASSEMBLY	REF		
2	2	D-CS-M8750-0-1		CIRCUIT SCHEMATIC	REF		
3	3	D-MD-5013706-0-0		DRILL & ETCH DRAWING	REF		
4	4	B-DD-M8750-0		DRAWING DIRECTORY	REF		
5	5		5013706-00	DRILL+ETCH MEMORY	1		
6	6	SPARE IC		SPARE IC	1		E30
7	7		1001610-00	.01 MFD 50V +80-20% Z5U CER	47		C1-C10,C12-C16,C18,C20-C24,
						CONT	C27-C30,C32-C41,C43,C44,C46,C49,
						CONT	C51,C53-C56,C58-C60
8	8		1010274-00	.22 MFD 50V +80-20% Z5U CER	164		C101-C155,C11,C17,C25,C26,C42,
						CONT	C52,C47,C200-C299,C50,C57
9	9		1012084-01	8 MFD 25V +75-10% AL EL	12		C70-C78,C80,C82,C83
10	10		1105275-00	PIV= 60 IO=300 MA -15NS	8		D55-D62
11	11		1109991-00	*** THIS ITEM IS NOT USED ***	-		
12	12		1114384-00	LED 105MW 35MA GREEN	1		D49
13	13		1216988-02	HANDLE,MODULE,HEX TWO EJECTORS	1		
14	14		1300309-00	390.0 .25 W 5.0 % CF	1		R20
15	15		1300365-00	1.0 K .25 W 5.0 % CF	1		R22
16	16		1301317-00	10.0 .25 W 5.0 % CF	2		R21,R23
17	17		1301972-00	270.0 .25 W 5.0 % CF	1		R16
18	18		1302124-00	18.0 .25 W 5.0 % CF	2		R33,R38
19	19		1302177-00	47.0 K .25 W 5.0 % CF	11		R1-R4,R6-R8,R12-R15
20	20		1315678-00	R NETWORK 3-18 5.0 % 7PIN	13		R30-R32,R34-R37,R39-R44
21	21		1513265-00	3725 QUAD CORE DRIVER	1		E33
22	22		1910091-00	DEC 7437 AND GATE-QUAD 2IN,BU	2		E15,E20
23	23		1910532-00	74S00 NAND GATE-QUAD 2IN	1		E22
24	24		1910534-00	74S04 INVERTER GATE-HEX 1I	1		E11
25	25		1911676-00	74S139 DECODER-DUAL TWO-INP	1		E3
26	26		1912068-00	74128 DRIVER,LINE,QUAD,50	1		E14
27	27		1912388-00	74S02 NOR GATE-QUAD 2IN,PO	2		E5,E9

REVISION HISTORY			BASIC PART NO: M8750										
ENG	ECO NUMBER	REV	SECTION B OF B	DRN: R. CROUSE	DATE: 13-JAN-81		D	I	G	I	T	A	L
	INITIAL	A	SECTION.VARIATION INDEX	CHK'D: P.BOSSMAN	DATE: 4-FEB-81	TITLE	PARTS LIST						
K.M	M8750-ML004	B	[A] CB,CD,CH,CJ			MOS MEMORY ARRAY							
K.M	M8750-SH005	C	[B] CP										
K.M	M8750-SH006	D	[C]	DES.ENG: K. MAMAYEK	DATE: 13-JAN-81								
			[D]										
			[E]			DOCUMENT NUMBER							
			[F]	RESP.ENG.: K. MAMAYEK	DATE: 13-JAN-81								
			[H]			SIZE	CODE	NUMBER				REV	
			[J]										
			[K]	MFG.ENG.: D. TAYLOR	DATE: 13-JAN-81	K	PL	M8750-CA-DBP				D	
			[L]										
			[M]	ASSEMBLY NUMBER:	TOP DOCUMENT NUMBER:			FILE NAME:				EDIT #	
			[N]	D-UA-M8750-0-0	#B-DD-M8750-0			Z2111D.PLS				4	

AUTOMATED BY PRTLST.3P(44)

P A R T S L I S T

LINE	ITEM	DOCUMENT NUMBER	PART NUMBER	DESCRIPTION	QTY PER VARIATION CP	REFERENCE DESIGNATOR
28	28		1912389-00	74S08 AND GATE-QUAD 2IN,PO	1	E4
29	29		1912746-00	DEC 74S37 NAND GATE-QUAD 2IN	11	E6,E10,E16,E18,E21,E23,E24,E26,
					CONT	E28,E31,E32
30	30		1913777-00	LS240 DRIVER,LINE,OCTAL,T	10	E1,E2,E7,E8,E12,E13,E17,E19,E25,
					CONT	E27
31	31		2113825-01	*** THIS ITEM IS NOT USED ***	-	
32	32		2118467-01	*** THIS ITEM IS NOT USED ***	-	
33	33		2118472-01	*** THIS ITEM IS NOT USED ***	-	
34	34		2118470-01	*** THIS ITEM IS NOT USED ***	-	
35	35		7010918-01	DIODE STICK G652	45	D1-D22,D26-D48
36	36		9000024-01	EYELET,ROLLED 0.1210DX0.192	12	
37	37		9006968-00	SPACER,THREADED RND PHEN 4-4	4	
38	38		9009185-00	JUMPER, WIRE, INSULATED, BLACK B	15	W2-W4,W6,W8,W10,W12,W13,W15,W16,
					CONT	W18-W20,W22,W23
39	39		9009233-04	SCREW,NYLN BIND SLOT 4-	4	
40	40		9009321-00	LOCK TITE, SCREW LOCK, 10CC PER	4	
41	41		9107771-00	TUBING,TEFLON .040ID	90	
42	42		2117370-01	*** THIS ITEM IS NOT USED ***	-	
43	43		2120549-01	64K MOS RAM 200NS 1	156	E100,E101,E103-E106,E108-E251,
					CONT	E253-E256,E258,E259

44 NOTE: M8750-CA IS THE PRIMARY VARIATION 256K X 39 BITS SYSTEM (NOT A MODULE TYPE).
45 NOTE: M8750-CB IS A MODULE TYPE USING HITACHI 64K MOS DEVICES.
46 NOTE: M8750-CD IS A MODULE TYPE USING FUJITSU 64K MOS DEVICES.
47 NOTE: M8750-CH IS A MODULE TYPE USING NEC 64K MOS DEVICES.
48 NOTE: ALL CLASS 21 PARTS: "ELECTRO-STATIC ITEM.
49 NOTE: ITEM #41 9107771-00 IS OPTIONAL FOR FAR EAST BUILDS ONLY.
50 NOTE: M8750-CJ IS A MODULE TYPE USING MOTOROLA 64K MOS DEVICES.
51 NOTE: M8750-CP IS A MODULE TYPE USING MITSUBISHI 64K MOS DEVICES.

D	I	G	I	T	A	L	TITLE MOS MEMORY ARRAY	SECTION B OF B	SIZE K	CODE PL	DOCUMENT NUMBER M8750-CA-DBP	REV D

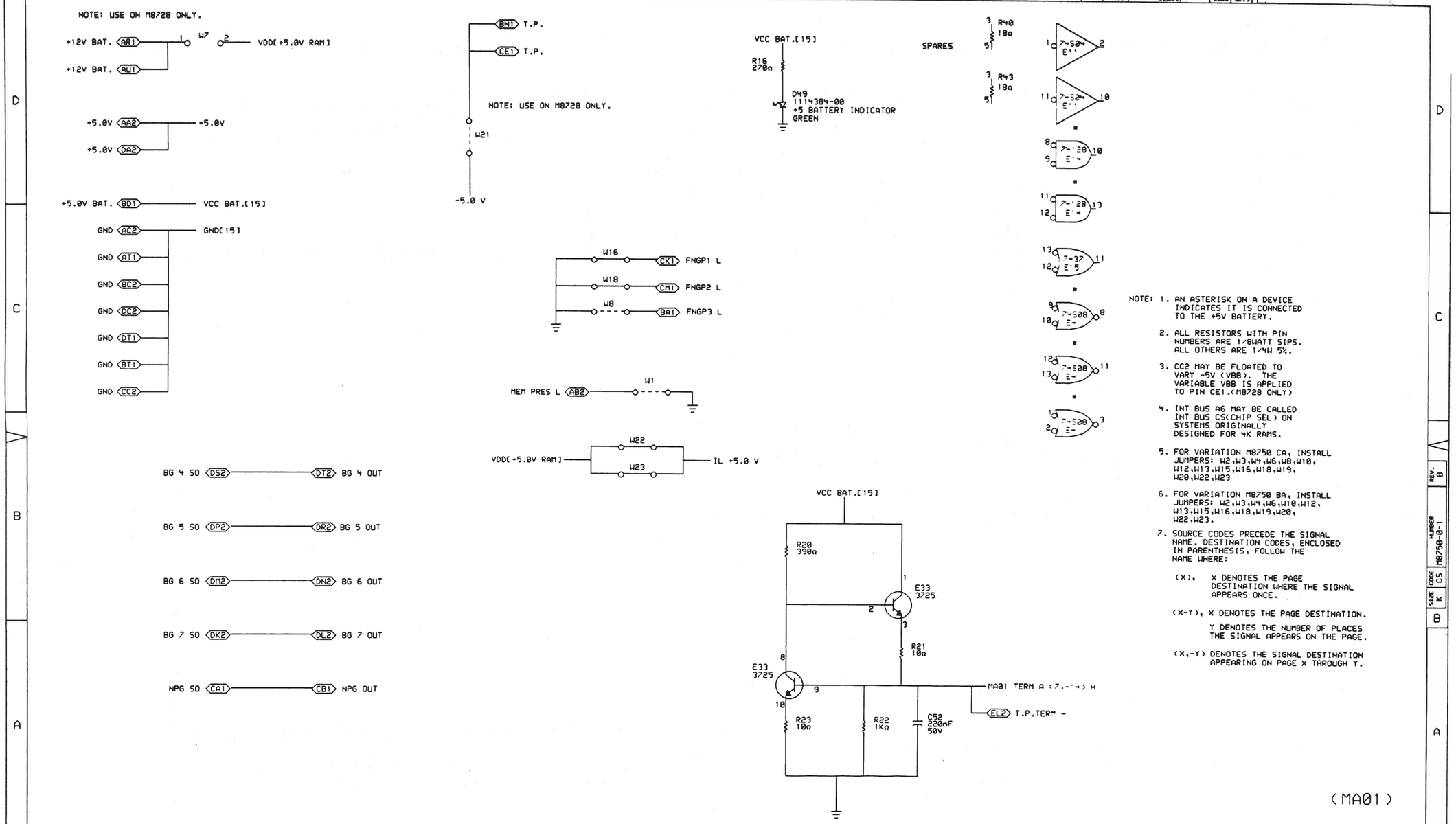

NOTE: 1. AN ASTERISK ON A DEVICE INDICATES IT IS CONNECTED TO THE +5V BATTERY.

2. ALL RESISTORS WITH PIN NUMBERS ARE 1/8WATT SIPS. ALL OTHERS ARE 1/4W 5%.

3. CC2 MAY BE FLOATED TO VARY -5V (VBB). THE VARIABLE VBB IS APPLIED TO PIN CE1.(M8728 ONLY)

4. INT BUS A6 MAY BE CALLED INT BUS CS(CHIP SEL) ON SYSTEMS ORIGINALLY DESIGNED FOR 4K RAMS.

5. FOR VARIATION M8750 CA, INSTALL JUMPERS: W2,W3,W4,W6,W8,W10, W12,W13,W15,W16,W18,W19, W20,W22,W23

6. FOR VARIATION M8750 BA, INSTALL JUMPERS: W2,W3,W4,W6,W10,W12, W13,W15,W16,W18,W19,W20, W22,W23.

7. SOURCE CODES PRECEDE THE SIGNAL NAME. DESTINATION CODES, ENCLOSED IN PARENTHESIS, FOLLOW THE NAME WHERE:

(X), X DENOTES THE PAGE DESTINATION WHERE THE SIGNAL APPEARS ONCE.

(X-Y), X DENOTES THE PAGE DESTINATION. Y DENOTES THE NUMBER OF PLACES THE SIGNAL APPEARS ON THE PAGE.

(X,-Y) DENOTES THE SIGNAL DESTINATION APPEARING ON PAGE X THROUGH Y.

REVISIONS		
CHK	CHANGE NO.	REV

digital

DRN. SENERCHIA DATE 07-APR-83
CHK'D P. BOSSMAN DATE 07-APR-83
ENG. KEN MAMAYEK DATE 07-APR-83
BOARD LOCATION:
SHEET 01 OF 15
PA:<SENERCHIA>M50B01.DRW 07-APR-83 14:26
NEXT HIGHER ASSEMBLY: B-DD-M8750-0
FIRST USED ON OPTION/MODEL: 11/750

TITLE: MOS MEMORY ARRAY

SIZE	CODE	NUMBER	REV.
K	CS	M8750-0-1	B

SHO

SENERCHIA, PA:<SENERCHIA>M50B01.DPL.1, SCALE 2, "D" RELEASE BOX, SIGNED OFF

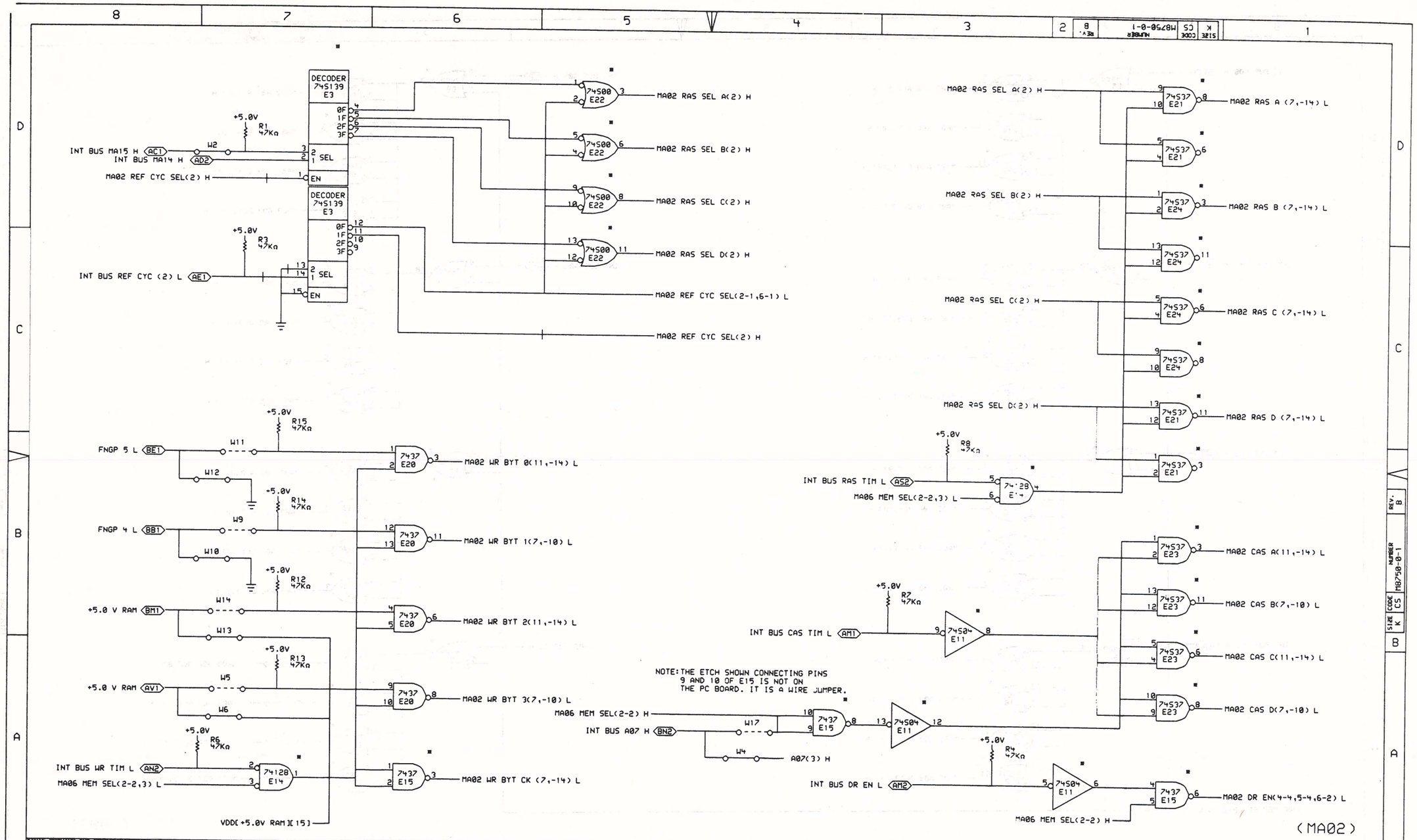

"THIS DRAWING AND SPECIFICATIONS, HEREIN, ARE THE PROPERTY OF DIGITAL EQUIPMENT CORPORATION AND SHALL NOT BE REPRODUCED OR COPIED OR USED IN WHOLE OR IN PART AS THE BASIS FOR THE MANUFACTURE OR SALE OF ITEMS WITHOUT WRITTEN PERMISSION. COPYRIGHT © 1983, DIGITAL EQUIPMENT CORPORATION"

REVISIONS		
CHK	CHANGE NO.	REV

DRN. SENERCHIA	DATE 07-APR-83	ENG. KEN MAMAYEK	DATE 07-APR-83	TITLE: MOS MEMORY ARRAY
CHK'D P. BOSSMAN	DATE 07-APR-83	BOARD LOCATION: SHEET 02 OF 15		
PA:<SENERCHIA>M50B02.DRW 07-APR-83 14:27		NEXT HIGHER ASSEMBLY: B-DD-M8750-0		SIZE K / CODE CS / NUMBER M8750-0-1 / REV. B
FIRST USED ON OPTION/MODEL: 11/750				

SENERCHIA, PA:<SENERCHIA>M50B02.DPL.1, SCALE 2, "D" RELEASE BOX, SIGNED OFF

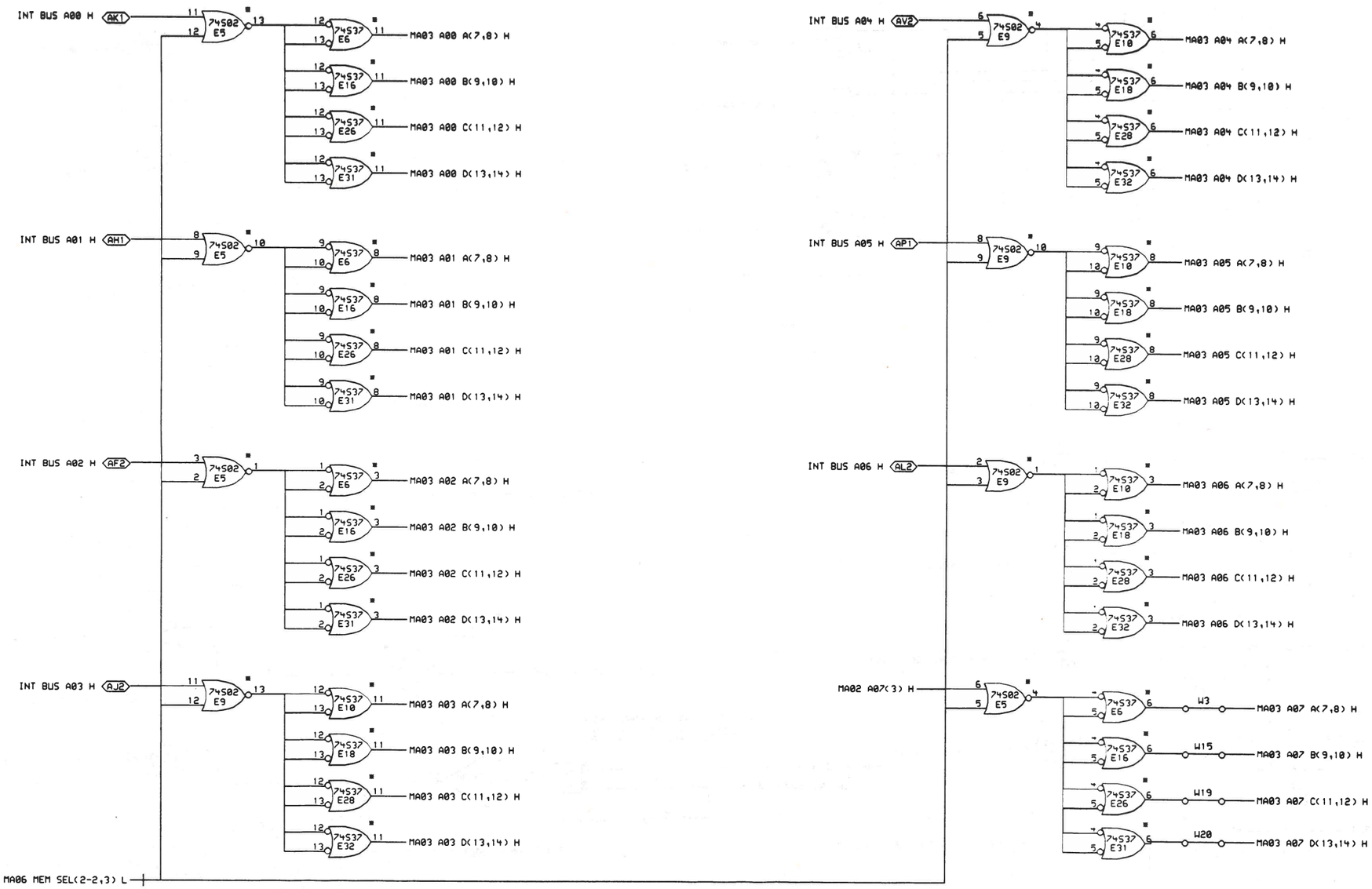

REVISIONS		
CHK	CHANGE NO.	REV

DRN. SENERCHIA DATE 07-APR-83
CHK'D P. BOSSMAN DATE 07-APR-83
ENG. KEN MAMAYEK DATE 07-APR-83
BOARD LOCATION: SHEET 03 OF 15
PA:<SENERCHIA>M50B03.DRW 07-APR-83 14:27
NEXT HIGHER ASSEMBLY: B-DD-M8750-0
FIRST USED ON OPTION/MODEL: 11/750

TITLE: MOS MEMORY ARRAY

SIZE	CODE	NUMBER	REV.
K	CS	M8750-0-1	B

SHO 1

SENERCHIA, PA:<SENERCHIA>M50B03.DPL.1, SCALE 2, "D" RELEASE BOX, SIGNED OFF

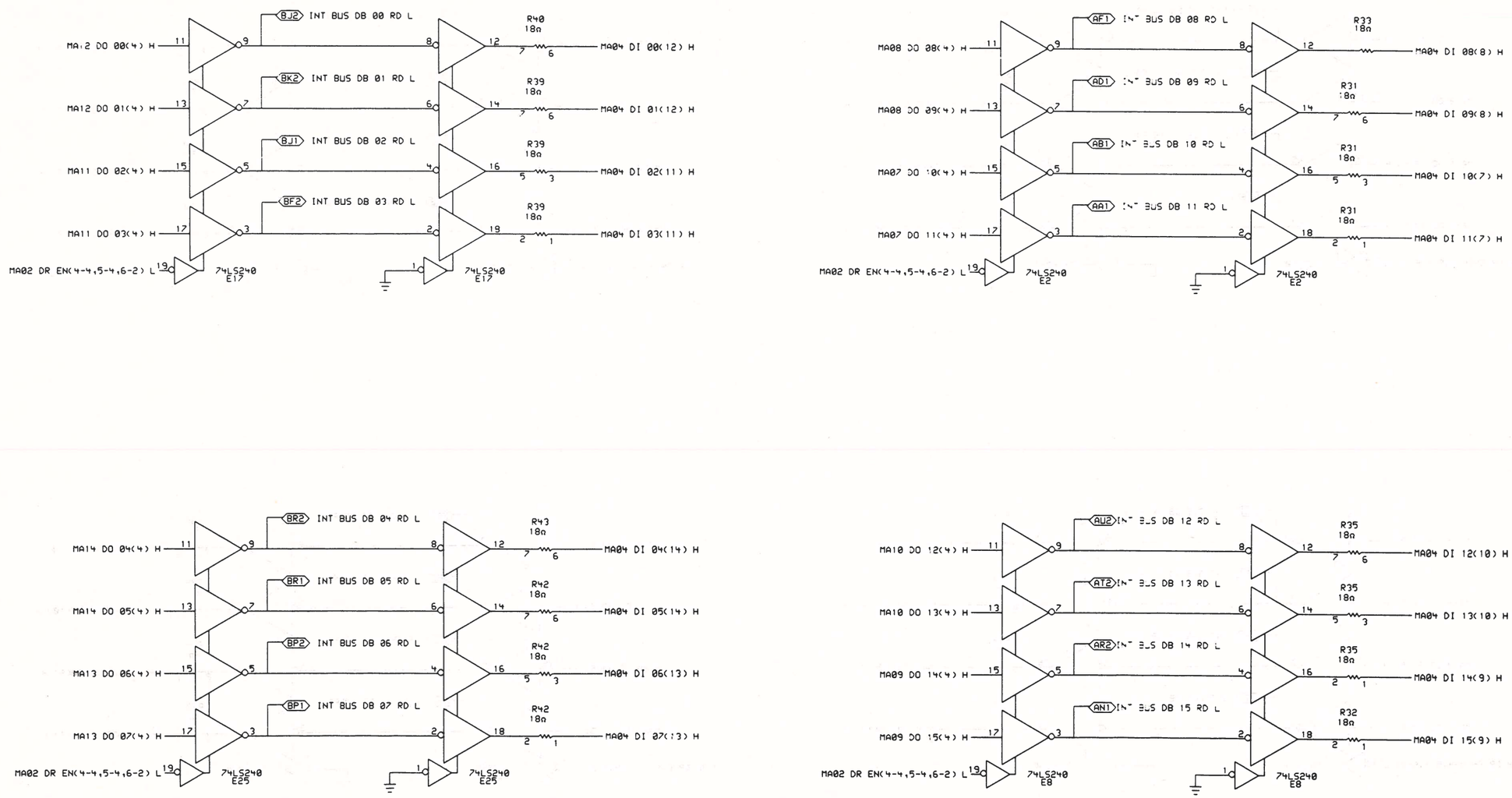

(MA04)

REVISIONS		
CHK	CHANGE NO.	REV

DRN. SENERCHIA	DATE 07-APR-83	ENG. KEN MAMAYEK	DATE 07-APR-83	TITLE: MOS MEMORY ARRAY
CHK'D P. BOSSMAN	DATE 07-APR-83	BOARD LOCATION: SHEET 04 OF 15		
PA:<SENERCHIA>M50804.DRW 07-APR-83 14:28		NEXT HIGHER ASSEMBLY:		SIZE K · CODE CS · NUMBER M8750-0-1 · REV. B
FIRST USED ON OPTION/MODEL: 11/750		B-DD-M8750-0		

SHO

SENERCHIA, PA:<SENERCHIA>M50804.DPL.1, SCALE 2, "D" RELEASE BOX, SIGNED OFF

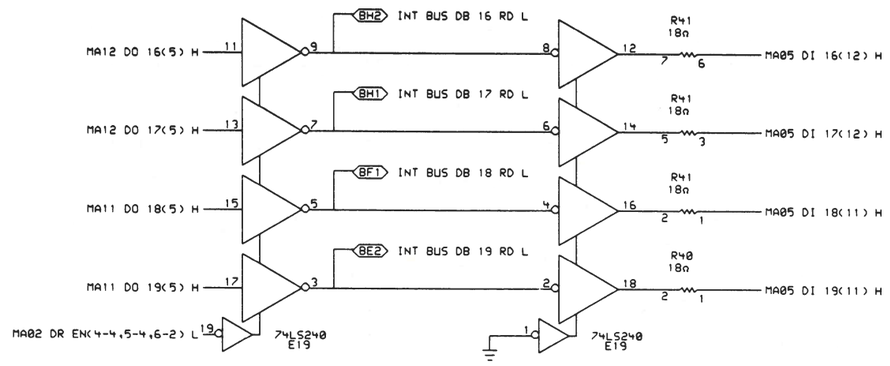

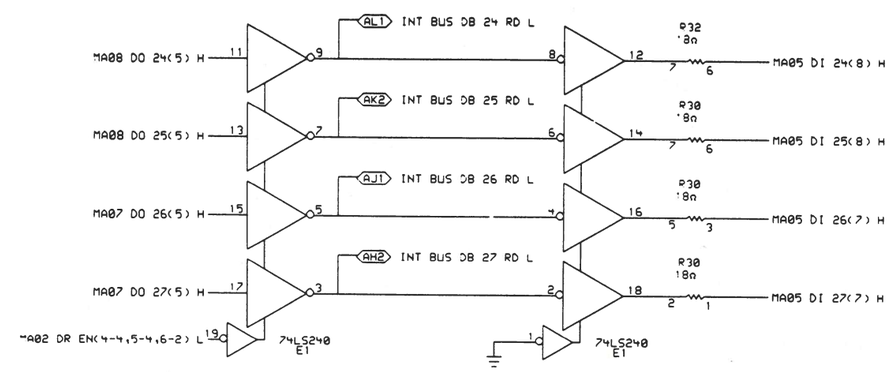

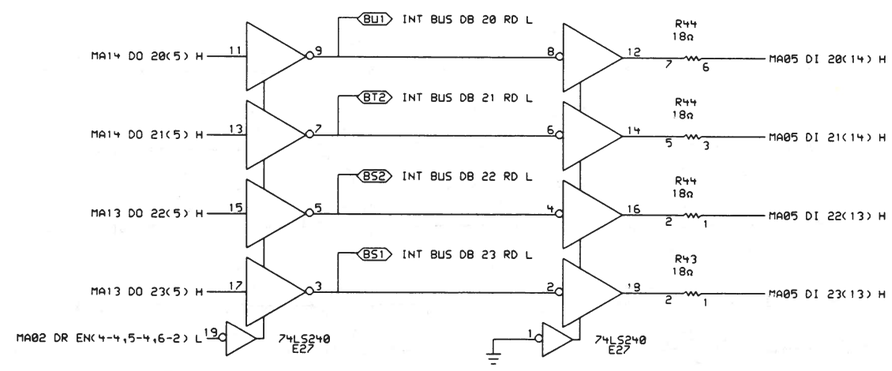

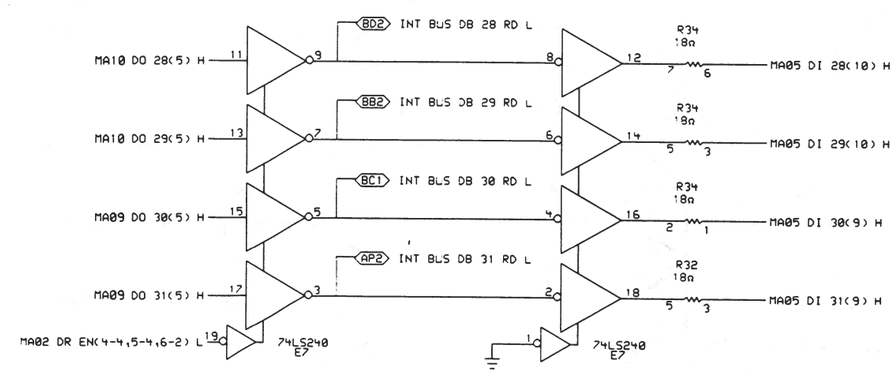

(MA05)

REVISIONS		
CHK	CHANGE NO.	REV

digital	DRN. SENERCHIA	DATE 07-APR-83	ENG. KEN MAMAYEK	DATE 07-APR-83	TITLE: MOS MEMORY ARRAY
	CHK'D. P. BOSSMAN	DATE 07-APR-83	BOARD LOCATION: SHEET 05 OF 15		
PA:<SENERCHIA>M50B05.DRW 07-APR-83 14:29			NEXT HIGHER ASSEMBLY:		SIZE K / CODE CS / NUMBER M8750-0-1 / REV. B
FIRST USED ON OPTION/MODEL: 11/750			B-DD-M8750-0		

SHO

SENERCHIA, PA:<SENERCHIA>M50B05.DPL.1, SCALE 2, "D" RELEASE BOX, SIGNED OFF

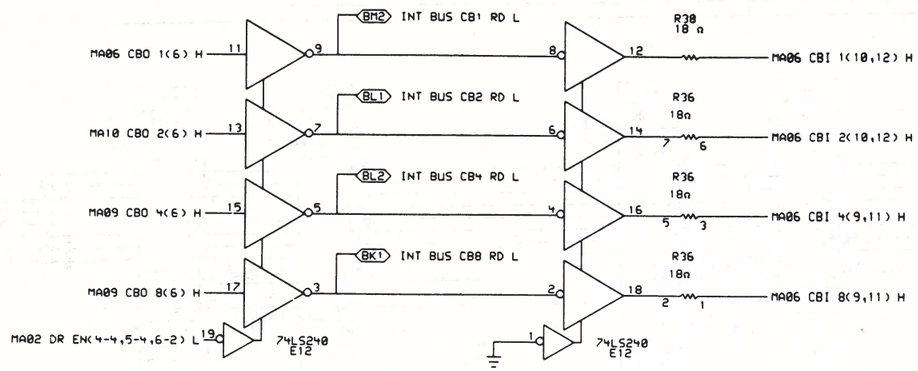

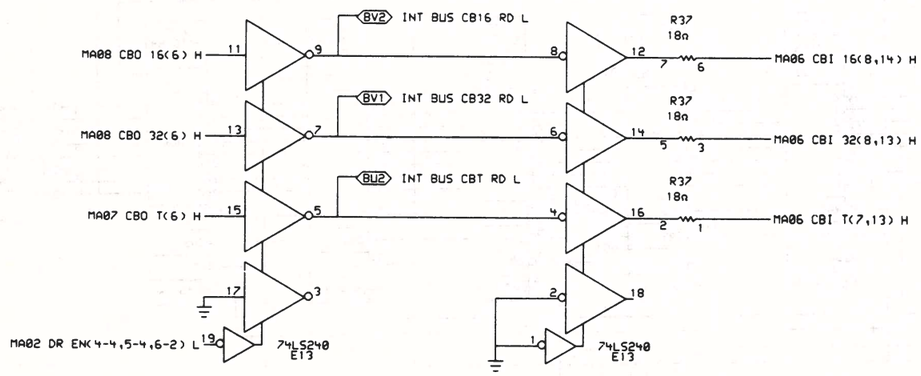

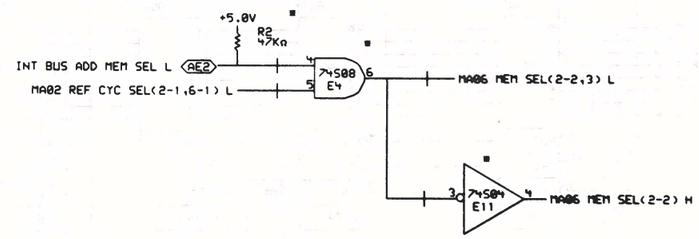

(MA06)

REVISIONS		
CHK	CHANGE NO.	REV

DRN. SENERCHIA — DATE 07-APR-83 — ENG. KEN MAMAYEK — DATE 07-APR-83
CHK'D P. BOSSMAN — DATE 07-APR-83 — BOARD LOCATION: SHEET 06 OF 15
PA:<SENERCHIA>M50806.DRW;07-APR-83 14:30 — NEXT HIGHER ASSEMBLY:
FIRST USED ON OPTION/MODEL: 11/750 — B-DD-M8750-0

TITLE: MOS MEMORY ARRAY

SIZE	CODE	NUMBER	REV.
K	CS	M8750-0-1	B

SHC

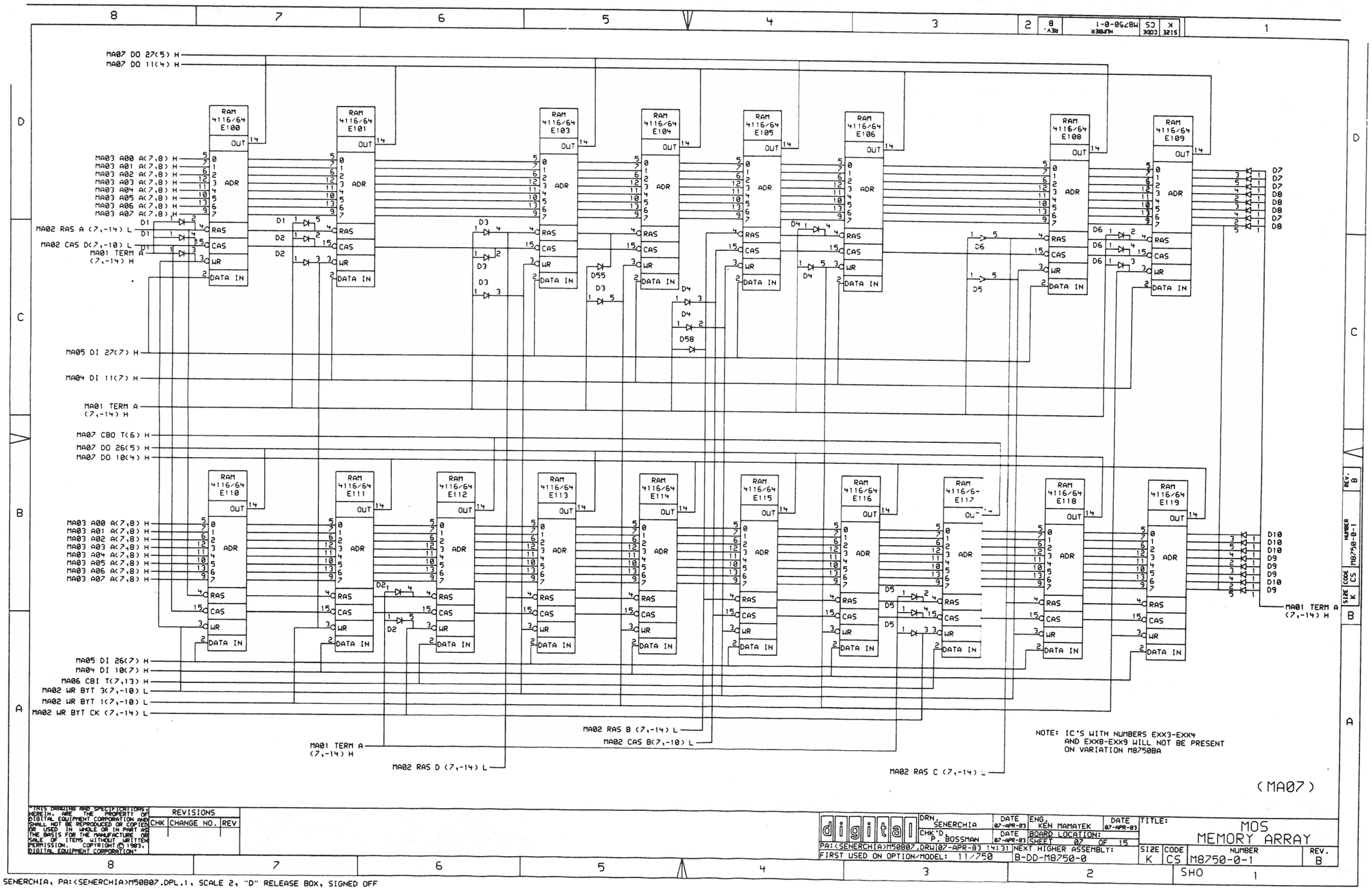

REVISIONS		
CHK	CHANGE NO.	REV

digital	DRN. SENERCHIA	DATE 07-APR-83	ENG. KEN MAMAYEK	DATE 07-APR-83
	CHK'D P. BOSSMAN	DATE 07-APR-83	BOARD LOCATION: SHEET 02 OF 15	
PA:(SENERCHIA)M50B07.DRW	07-APR-83 14:31		NEXT HIGHER ASSEMBLY: B-DD-M8750-0	
FIRST USED ON OPTION/MODEL: 11/750				

TITLE: MOS MEMORY ARRAY

SIZE	CODE	NUMBER	REV.
K	CS	M8750-0-1	B

SHO 1

SENERCHIA, PA:(SENERCHIA)M50B07.DPL.1, SCALE 2, "D" RELEASE BOX, SIGNED OFF

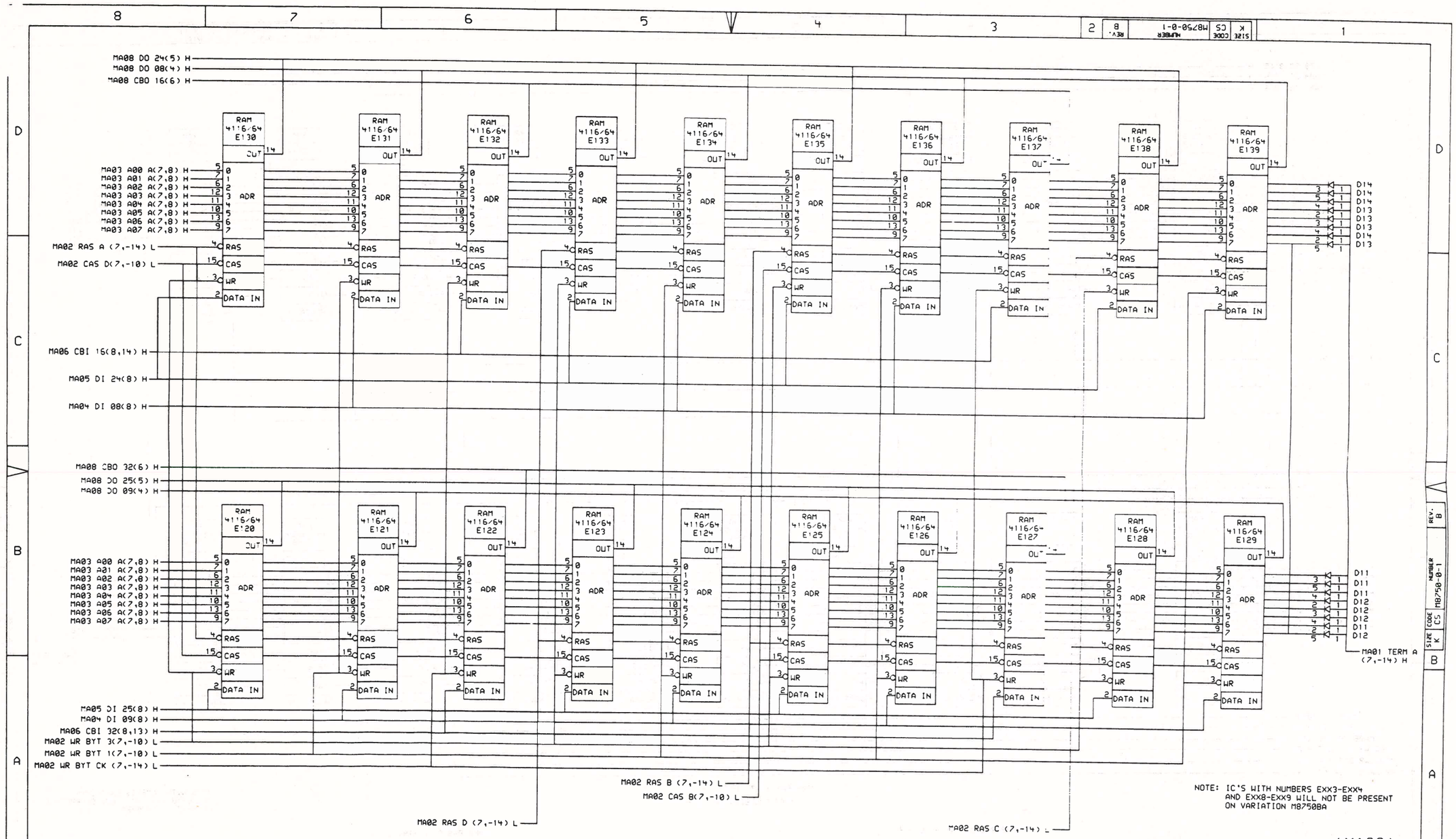

REVISIONS		
CHK	CHANGE NO.	REV

DRN. SENERCHIA	DATE 07-APR-83	ENG. KEN MAMAYEK	DATE 07-APR-83	TITLE: MOS MEMORY ARRAY
CHK'D P. BOSSMAN	DATE 07-APR-83	BOARD LOCATION: SHEET 08 OF 15		
PA:<SENERCHIA>M50B08.DRW 07-APR-83 14:31		NEXT HIGHER ASSEMBLY: B-DD-M8750-0		SIZE K · CODE CS · NUMBER M8750-0-1 · REV. B
FIRST USED ON OPTION/MODEL: 11/750				SHO 1

SENERCHIA, PA:<SENERCHIA>M50B08.DPL.1, SCALE 2, "D" RELEASE BOX, SIGNED OFF

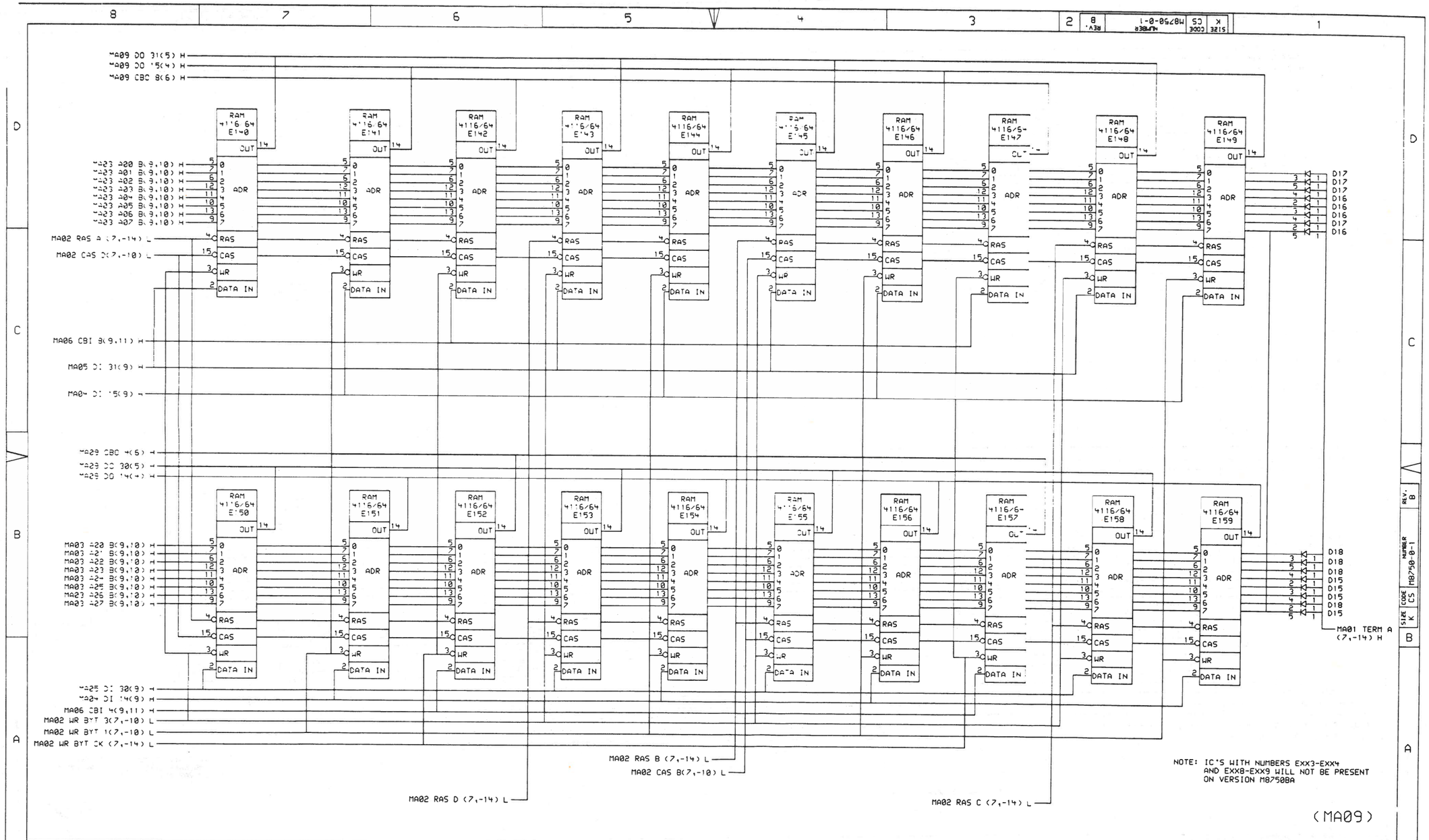

REVISIONS		
CHK	CHANGE NO.	REV

DRN. SENERCHIA	DATE 07-APR-83	ENG. KEN MAMAYEK	DATE 07-APR-83	TITLE: MOS MEMORY ARRAY
CHK'D. P. BOSSMAN	DATE 07-APR-83	BOARD LOCATION: SHEET 09 OF 15		
PA:<SENERCHIA>M50B09.DRW 07-APR-83 14:32		NEXT HIGHER ASSEMBLY: B-DD-M8750-0		
FIRST USED ON OPTION/MODEL: 11/750				

SIZE	CODE	NUMBER	REV.
K	CS	M8750-0-1	B

SHO

SENERCHIA, PA:<SENERCHIA>M50B09.DPL.1, SCALE 2, "D" RELEASE BOX, SIGNED OFF

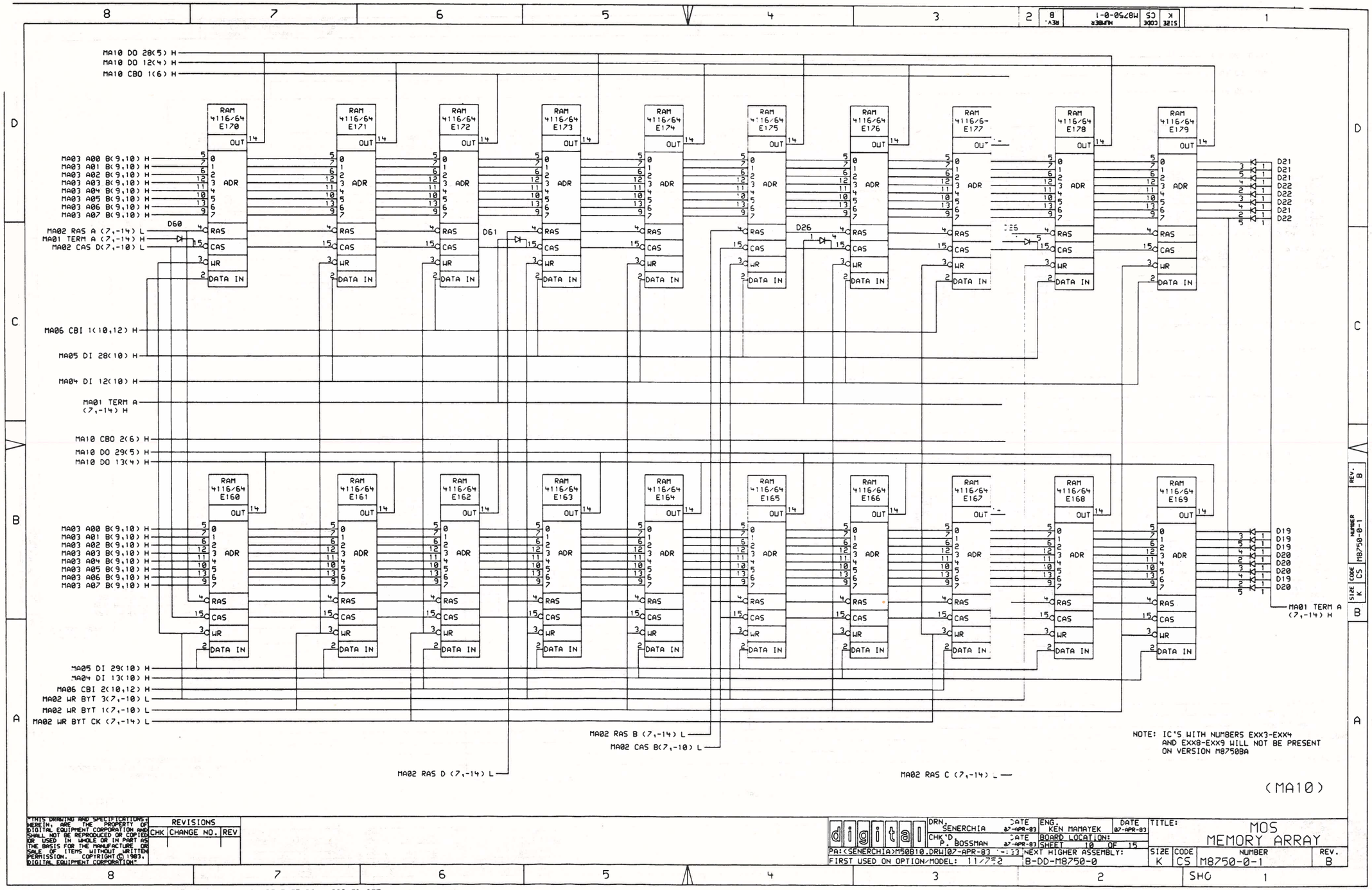

REVISIONS		
CHK	CHANGE NO.	REV

digital

DRN. SENERCHIA DATE 07-APR-83
CHK'D P. BOSSMAN DATE 07-APR-83
ENG. KEN MAMAYEK DATE 07-APR-83
BOARD LOCATION:
SHEET 10 OF 15
PA:<SENERCHIA>M50B10.DRW 07-APR-83
NEXT HIGHER ASSEMBLY:
FIRST USED ON OPTION/MODEL: 11/752 B-DD-M8750-0

TITLE: MOS MEMORY ARRAY

SIZE	CODE	NUMBER	REV.
K	CS	M8750-0-1	B

SHO

SENERCHIA, PA:<SENERCHIA>M50B10.DPL.1, SCALE 2, "D" RELEASE BOX, SIGNED OFF

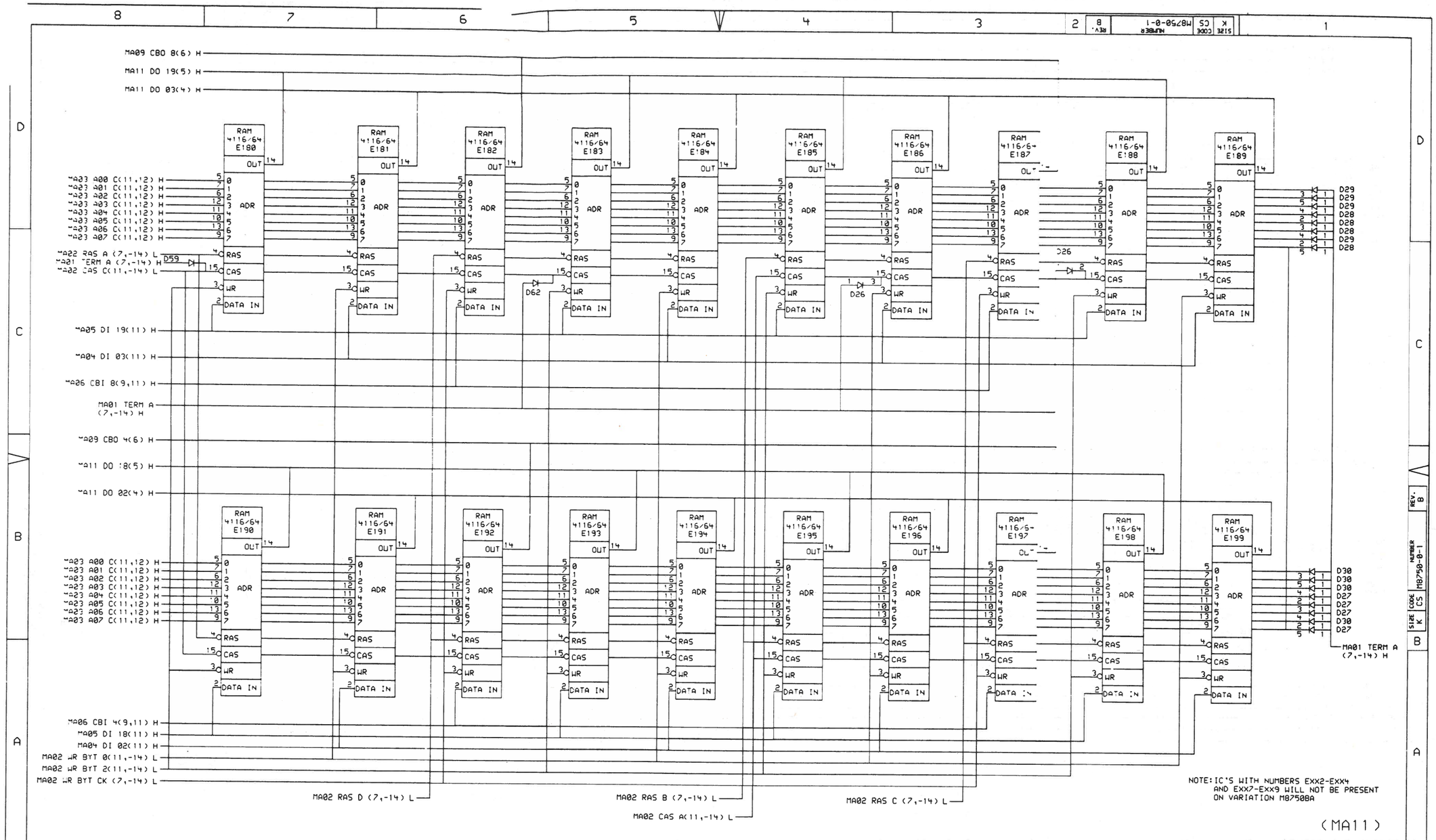

REVISIONS		
CHK	CHANGE NO.	REV

digital

DRN. SENERCHIA	DATE 07-APR-83	ENG. KEN MAMAYEK	DATE 07-APR-83
CHK'D P. BOSSMAN	DATE 07-APR-83	BOARD LOCATION:	
		SHEET 11 OF 15	
PA:<SENERCHIA>M50B11.DRW	07-APR-83	NEXT HIGHER ASSEMBLY:	
FIRST USED ON OPTION/MODEL: 11/750		B-DD-M8750-0	

TITLE: MOS MEMORY ARRAY

SIZE	CODE	NUMBER	REV.
K	CS	M8750-0-1	B

SHO

SENERCHIA, PA:<SENERCHIA>M50B11.DPL.1, SCALE 2, "D" RELEASE BOX, SIGNED OFF

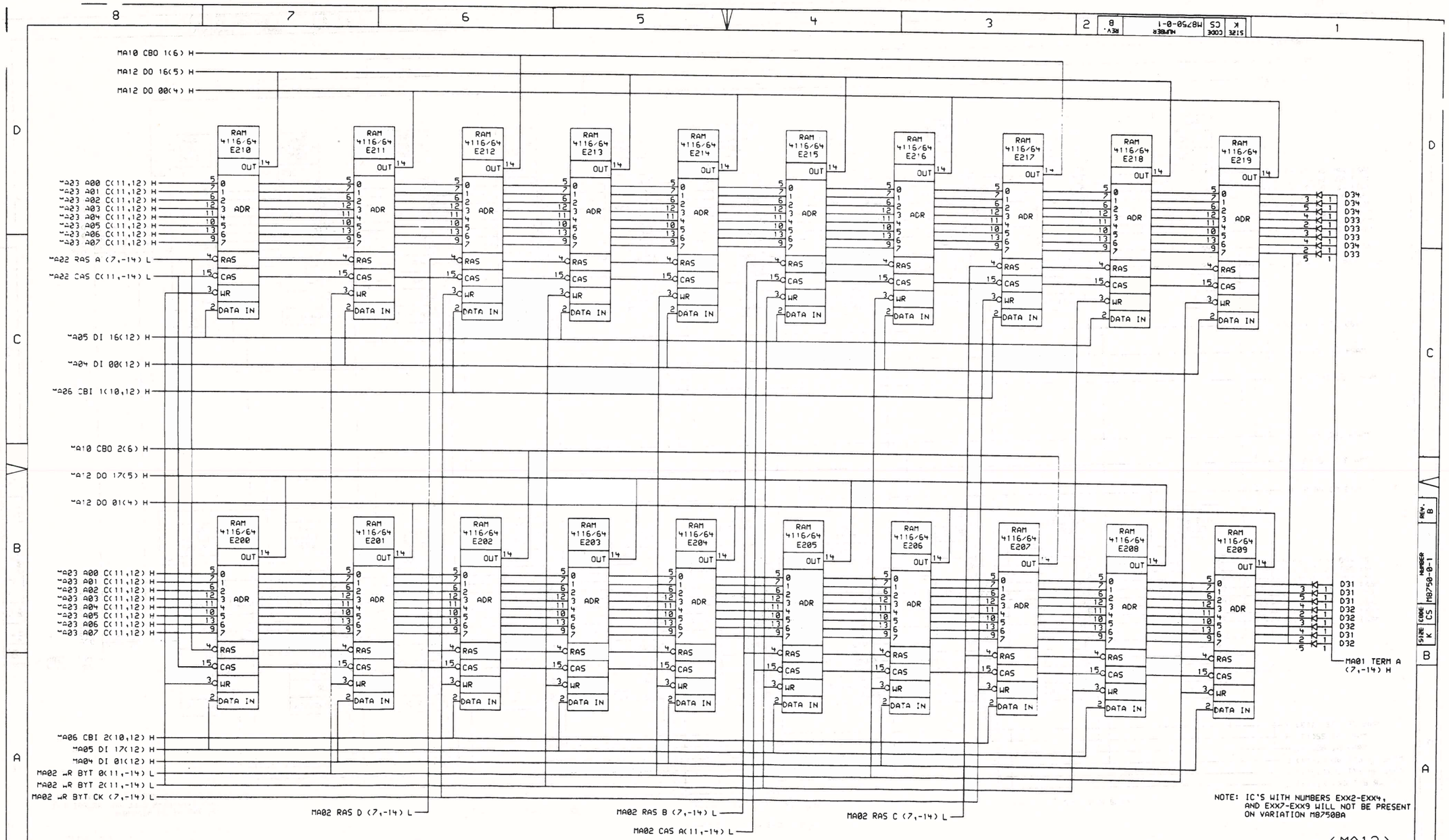

REVISIONS		
CHK	CHANGE NO.	REV

DRN. SENERCHIA	DATE 07-APR-83	ENG. KEN MAMAYEK	DATE 07-APR-83	TITLE: MOS MEMORY ARRAY
CHK'D P. BOSSMAN	DATE 07-APR-83	BOARD LOCATION: SHEET 12 OF 15		
PA:<SENERCHIA>M50B12.DRW 07-APR-83 14:35		NEXT HIGHER ASSEMBLY: B-DD-M8750-0		SIZE K · CODE CS · NUMBER M8750-0-1 · REV. B
FIRST USED ON OPTION/MODEL: 11/750				

SENERCHIA, PA:<SENERCHIA>M50B12.DPL.1, SCALE 2, "D" RELEASE BOX, SIGNED OFF

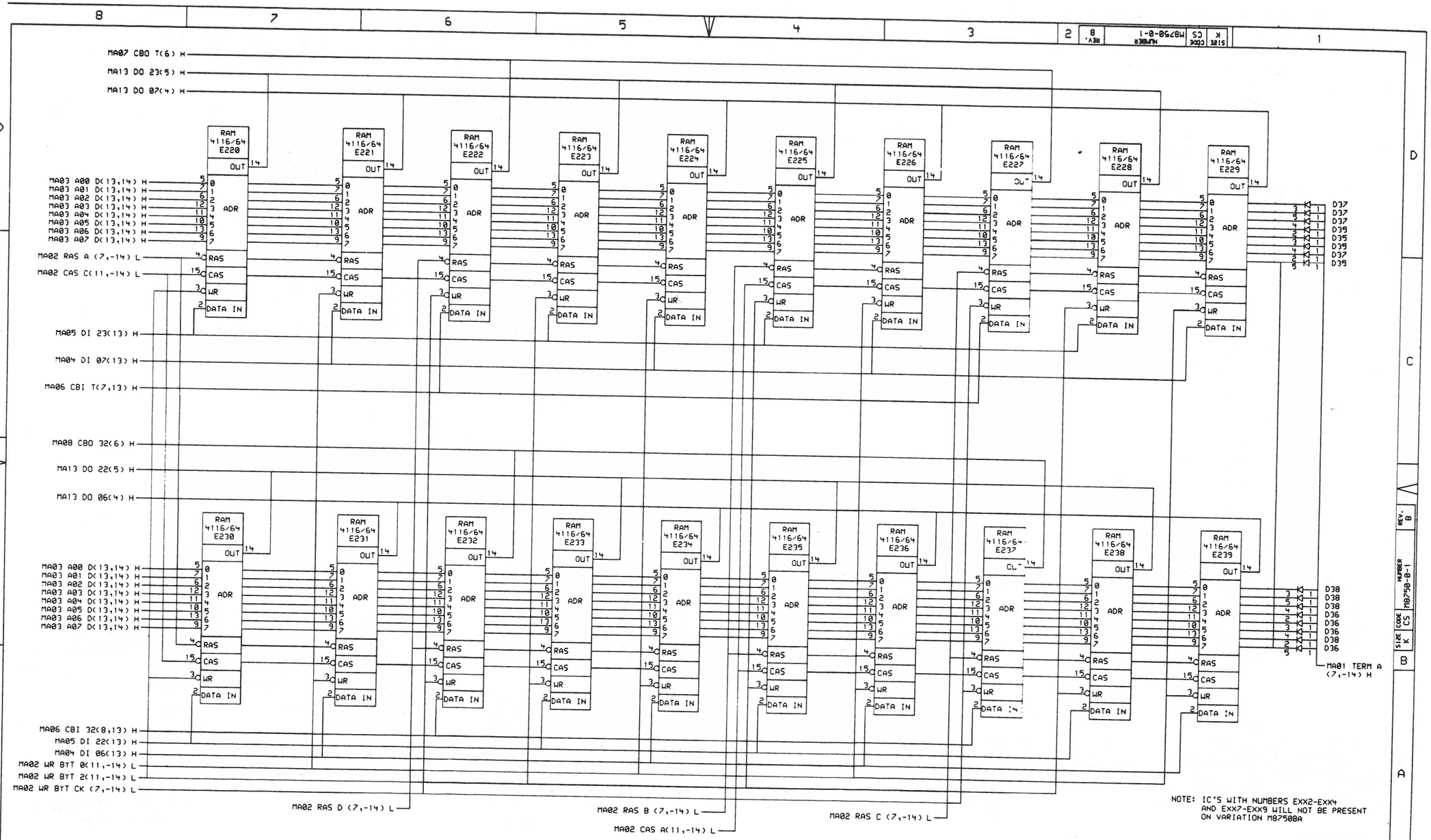

NOTE: IC'S WITH NUMBERS EXX2-EXX4 AND EXX7-EXX9 WILL NOT BE PRESENT ON VARIATION M8750BA

(MA13)

REVISIONS		
CHK	CHANGE NO.	REV

digital

DRN. SENERCHIA — DATE 07-APR-83
CHK'D P. BOSSMAN — DATE 07-APR-83
ENG. KEN MAMAYEK — DATE 07-APR-83
BOARD LOCATION:
SHEET 13 OF 15
PA:<SENERCHIA>M50B13.DRW 07-APR-83 14:36
NEXT HIGHER ASSEMBLY: B-DD-M8750-0
FIRST USED ON OPTION/MODEL: 11/750

TITLE: MOS MEMORY ARRAY

SIZE	CODE	NUMBER	REV.
K	CS	M8750-0-1	B

SHO 1

SENERCHIA, PA:<SENERCHIA>M50B13.DPL.1, SCALE 2, "D" RELEASE BOX, SIGNED OFF

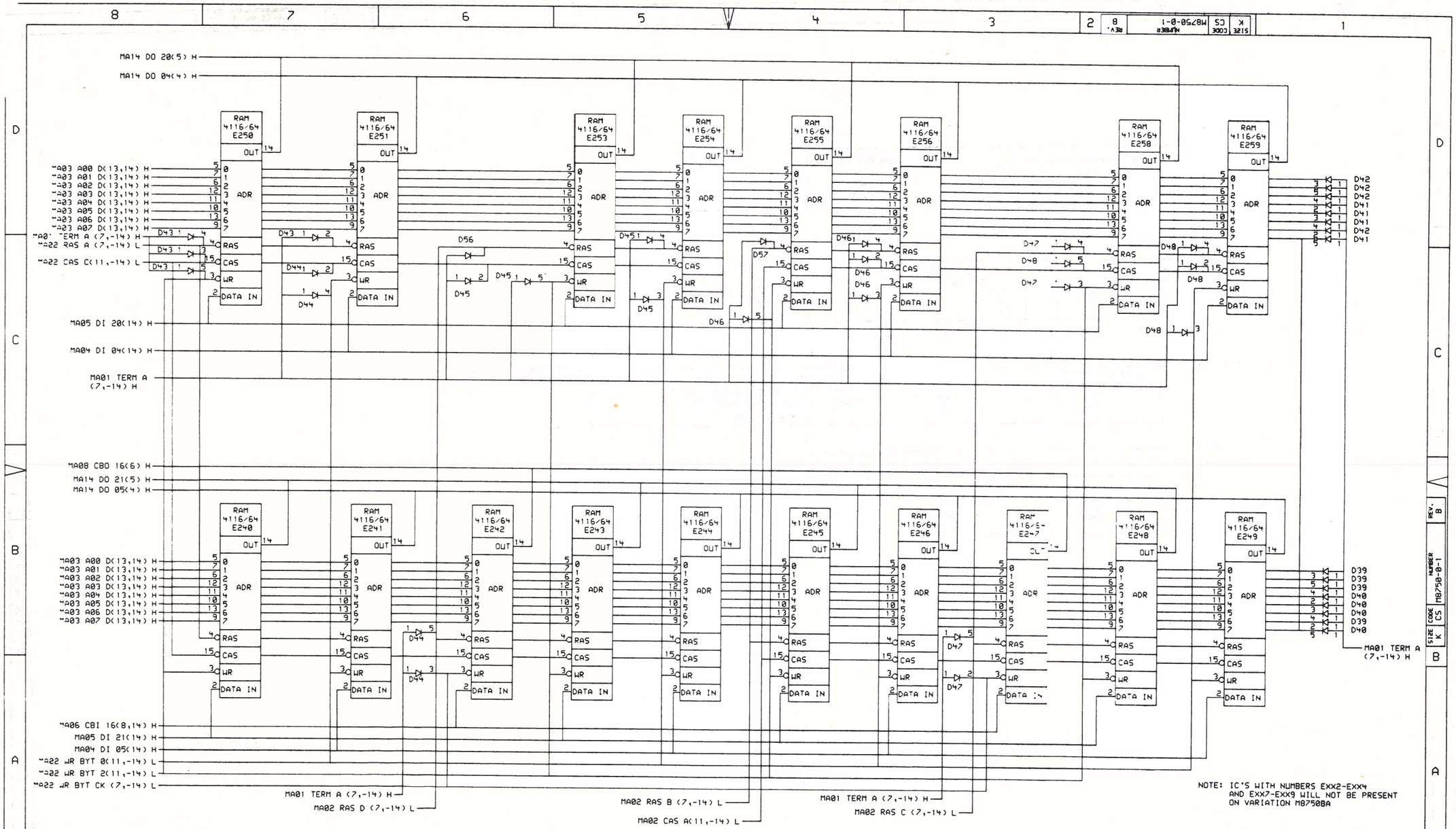

NOTE: IC'S WITH NUMBERS EXX2-EXX4 AND EXX7-EXX9 WILL NOT BE PRESENT ON VARIATION M8750BA

(MA14)

REVISIONS		
CHK	CHANGE NO.	REV

digital

DRN. SENERCHIA	DATE 07-APR-83	ENG. KEN MAMAYEK	DATE 07-APR-83
CHK'D P. BOSSMAN	DATE 07-APR-83	BOARD LOCATION:	
PA:<SENERCHIA>M50B14.DRW 07-APR-83 14:36		SHEET 14 OF 15	
FIRST USED ON OPTION/MODEL: 11/750		NEXT HIGHER ASSEMBLY: B-DD-M8750-0	

TITLE: MOS MEMORY ARRAY

SIZE	CODE	NUMBER	REV.
K	CS	M8750-0-1	B

SHO

SENERCHIA, PA:<SENERCHIA>M50B14.DPL.1, SCALE 2, "D" RELEASE BOX, SIGNED OFF

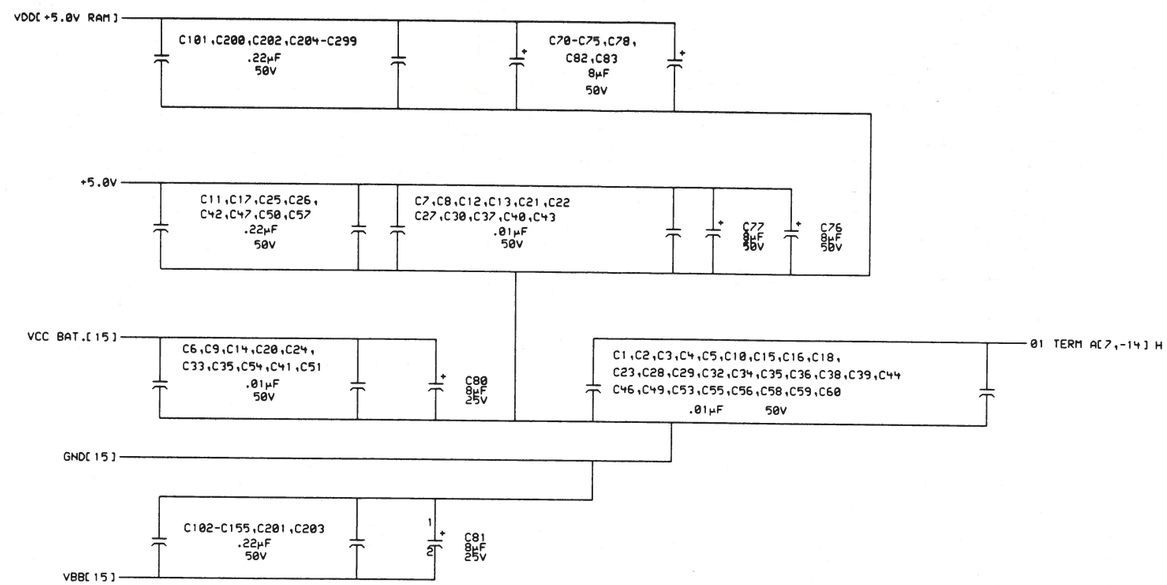

(MA15)

REVISIONS		
CHK	CHANGE NO.	REV

digital	DRN. SENERCHIA	DATE 07-APR-83	ENG. KEN MAMAYEK	DATE 07-APR-83	TITLE: MOS MEMORY ARRAY
	CHK'D P. BOSSMAN	DATE 07-APR-83	BOARD LOCATION: SHEET 15 OF 15		
	PA:<SENERCHIA>M50B15.DRW 07-APR-83 14:37		NEXT HIGHER ASSEMBLY: B-DD-M8750-0		SIZE K / CODE CS / NUMBER M8750-0-1 / REV. B
	FIRST USED ON OPTION/MODEL: 11/750				SHO

SENERCHIA, PA:<SENERCHIA>M50B15.DPL.1, SCALE 2, "D" RELEASE BOX, SIGNED OFF

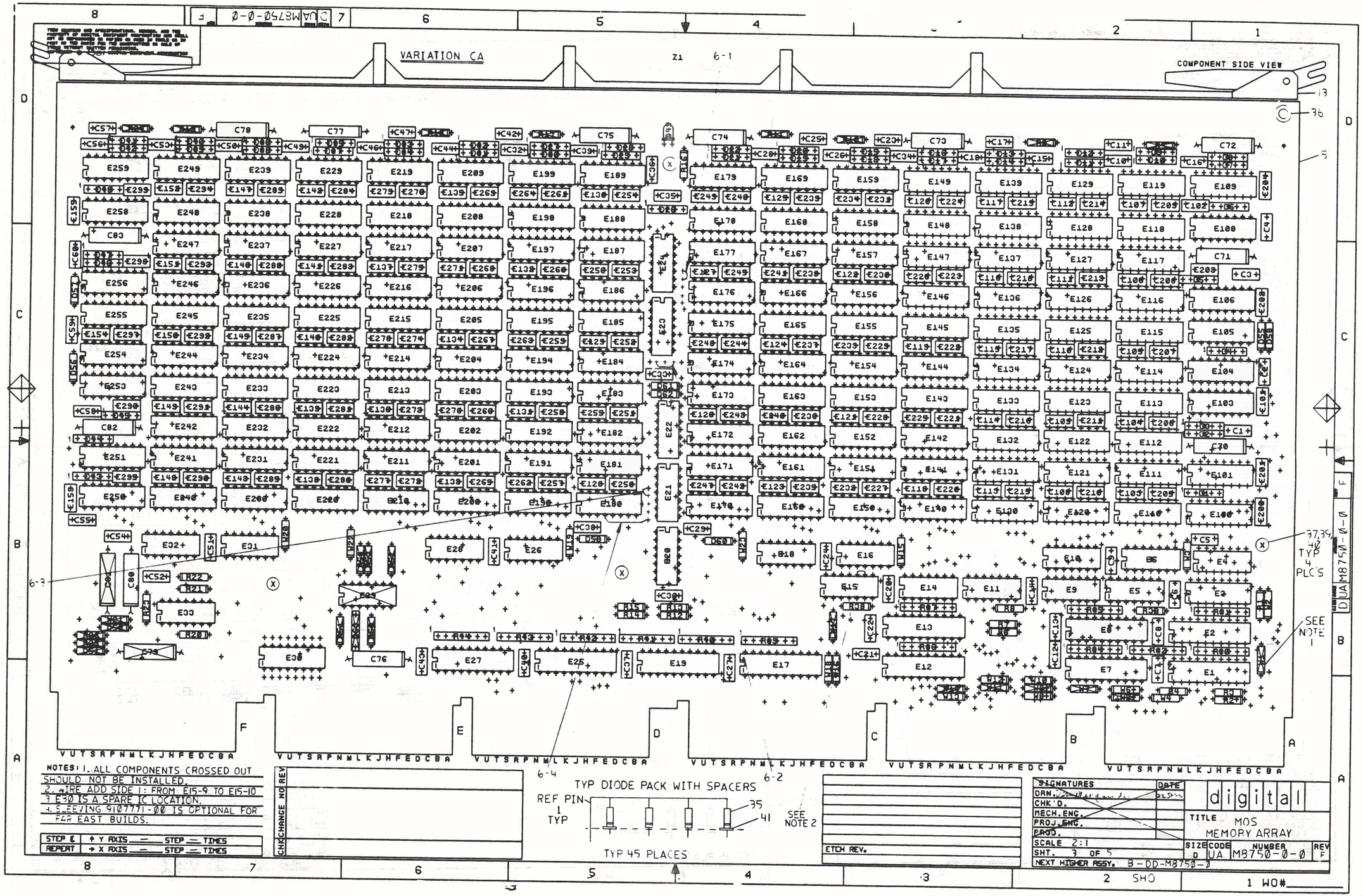
VARIATION CA
Z1 6-1
COMPONENT SIDE VIEW
37,39,42 TYP 4 PLC'S
SEE NOTE 1
6-3
6-4
6-2
TYP DIODE PACK WITH SPACERS
REF PIN 1 TYP
35
41
SEE NOTE 2
TYP 45 PLACES
NOTES: 1. ALL COMPONENTS CROSSED OUT SHOULD NOT BE INSTALLED.
2. WIRE ADD SIDE 1: FROM E15-9 TO E15-10
3. E30 IS A SPARE IC LOCATION.
4. SLEEVING 9107771-00 IS OPTIONAL FOR FAR EAST BUILDS.
STEP & REPEAT
Y AXIS — STEP — TIMES
X AXIS — STEP — TIMES
CHANGE NO REV
SIGNATURES
DATE
DRN.
CHK'D.
MECH. ENG.
PROJ. ENG.
PROD.
SCALE 2:1
SHT. 3 OF 5
NEXT HIGHER ASSY. B-DD-M8750-0
ETCH REV.
digital
TITLE MOS MEMORY ARRAY
SIZE D
CODE UA
NUMBER M8750-0-0
REV F
SHO
WO#

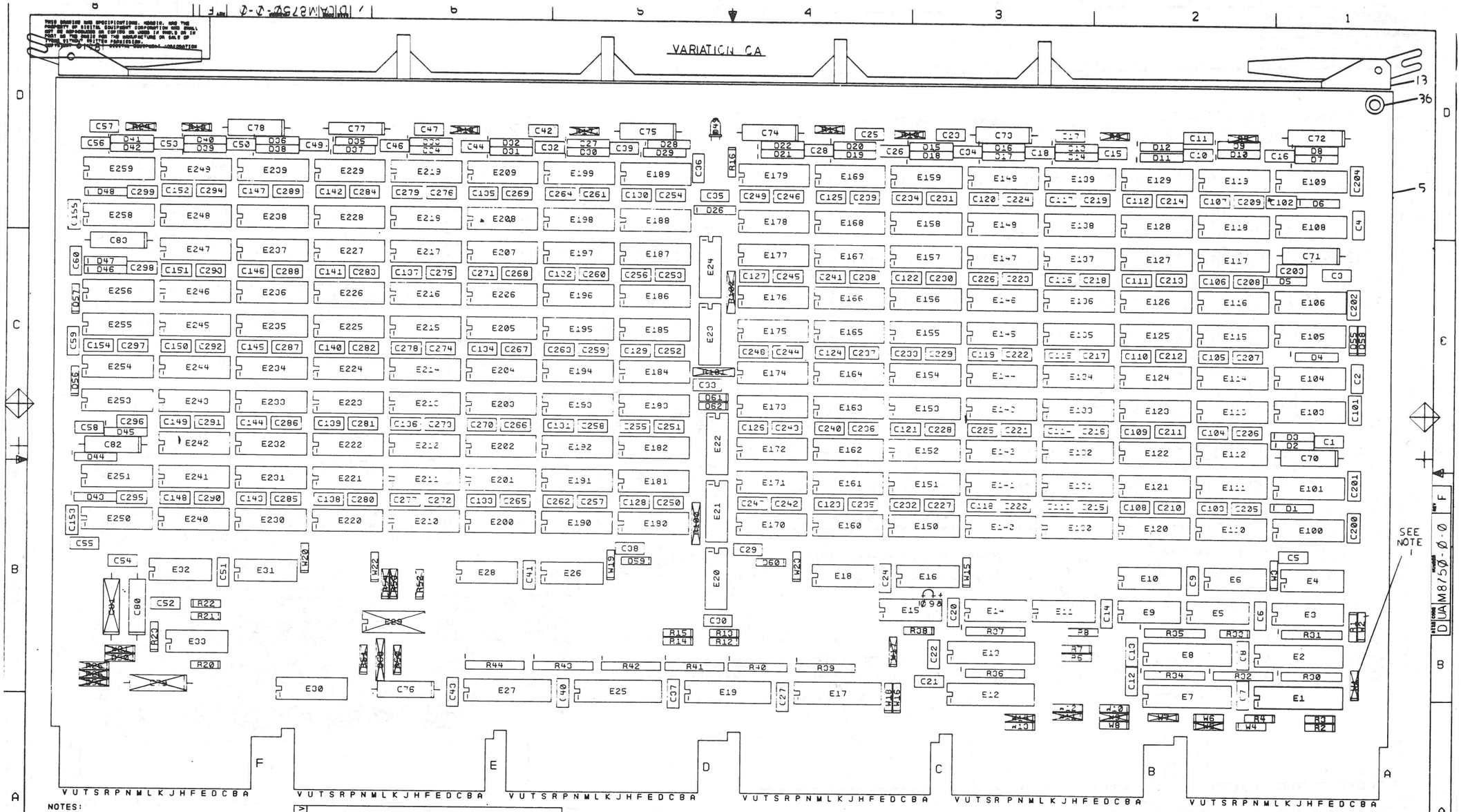

NOTES:

1. ALL COMPONANTS CROSSED OUT SHOULD NOT BE INSTALLED.
2. WIRE ADD SIDE 1: FROM E15-9 TO E5-10
3. E30 IS A SPARE IC LOCATION.
4. SLEEVING 9107771-00 IS OPTIONAL FOR FAR EAST BUILDS.

STEP & REPEAT	
↑ Y AXIS ___ STEP ___ TIMES	
→ X AXIS ___ STEP ___ TIMES	

CHK	CHANGE NO	REV

SIGNATURES	DATE
DRN.	
CHK'D.	
MECH.ENG.	
PROJ.ENG.	
PROD.	
SCALE 2/1	
SHT. 4 OF 5	
NEXT HIGHER ASSY. B-DD-M8750-0	

digital

TITLE MOS MEMORY ARRAY

SIZE	CODE	NUMBER	REV
D	UA	M8750-0-0	F

SHO 1 WO#

LAYER 1 L1

12/13 MIL M8728 5013706 C-P1

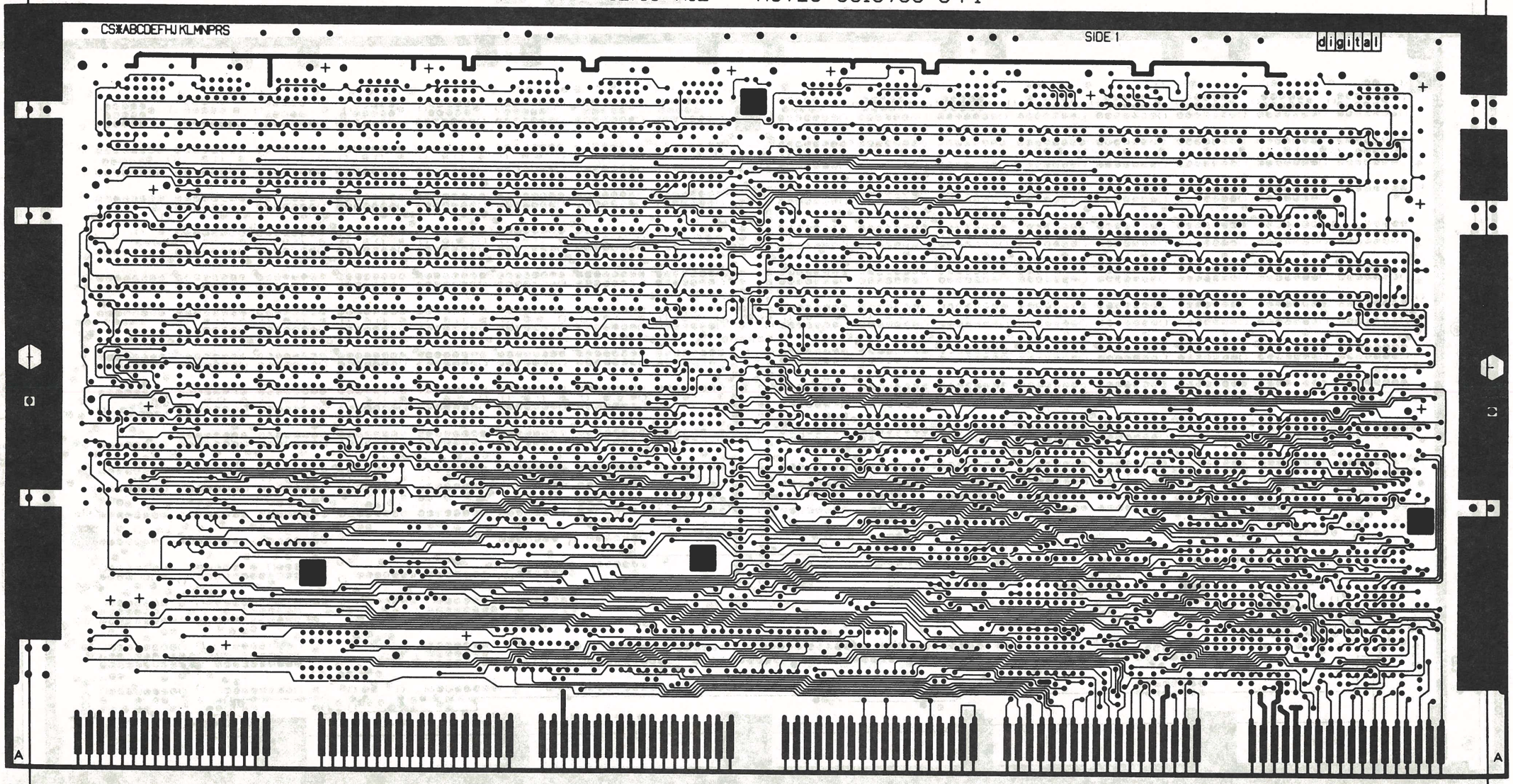

REVISIONS		
	CHANGE NO	

TITLE	SIZE	CODE	NUMBER	REV.
MOS MEMORY ARRAY	D	UA	M8728-0-0	C
SCALE 2/1	SHEET 5 OF 8	DIST.		

SHO

LAYER 2 L2

12/13 MIL M8728 5013706 C-P1

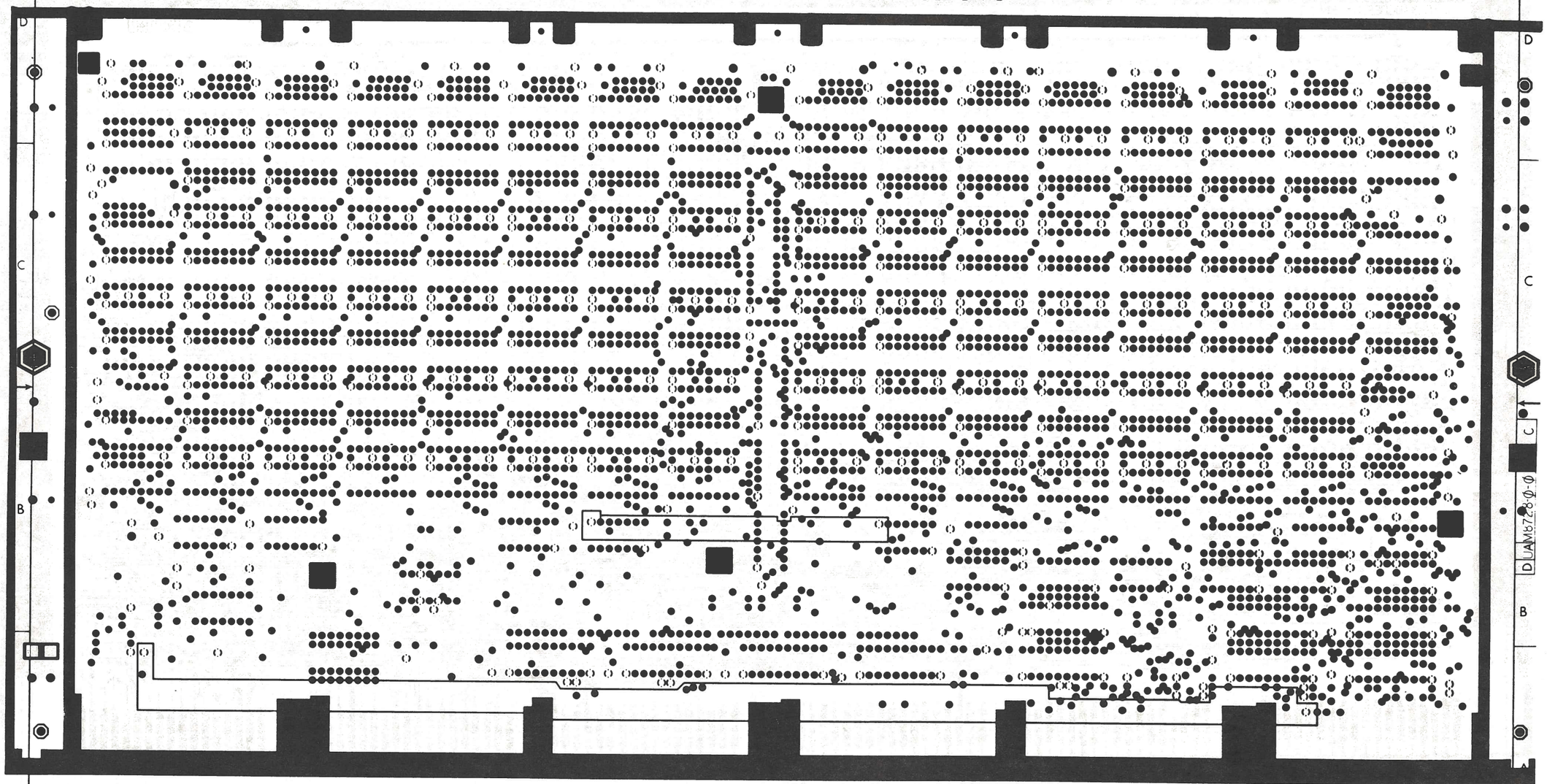

TITLE	SIZE	CODE	NUMBER	REV
MOS MEMORY ARRAY	D	UA	M8728-0-0	C
SCALE 2/1	SHEET 6 OF 8	DIST		

SHO

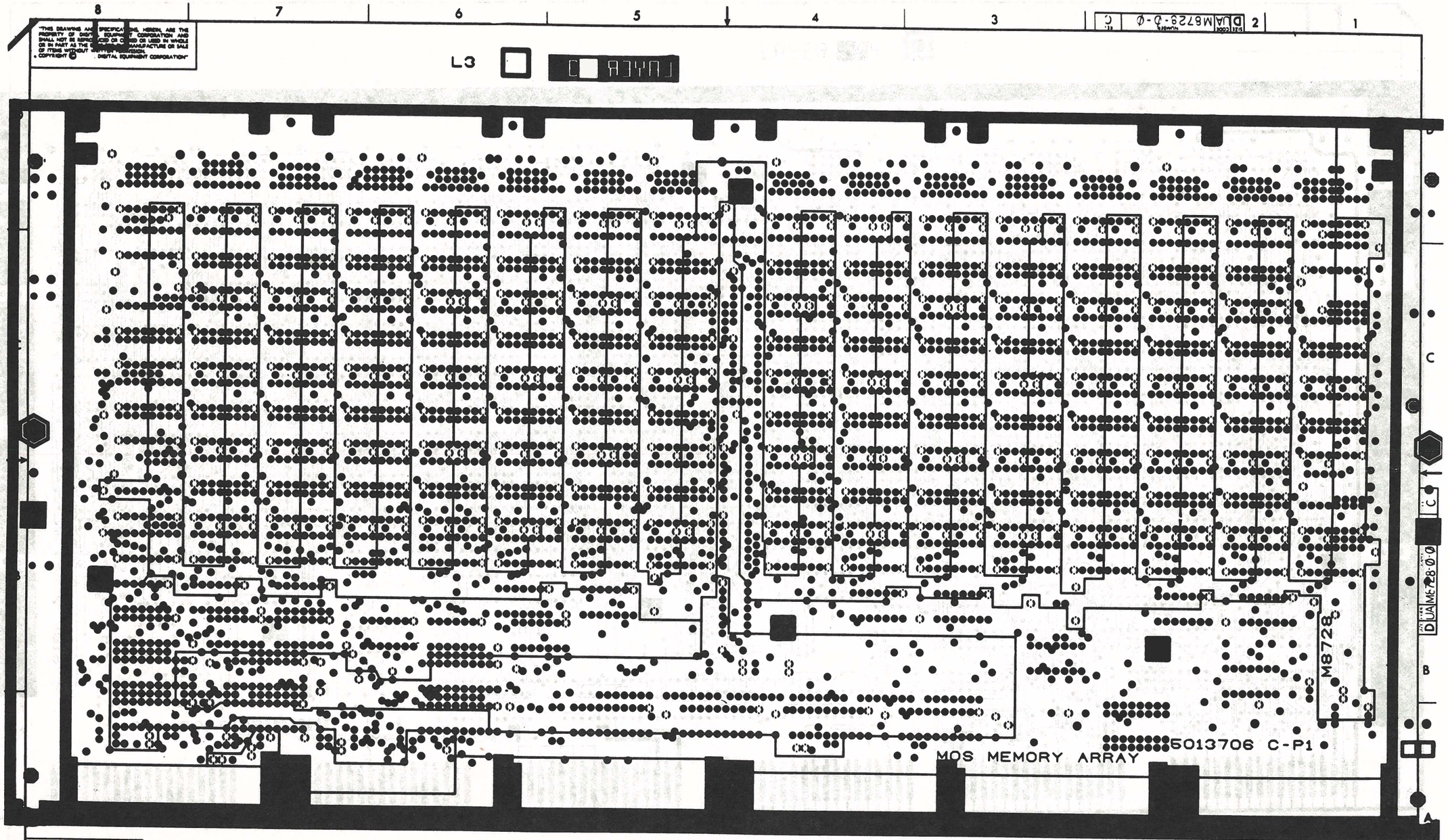

REVISIONS		
CHK	CHANGE NO	REV

TITLE	SIZE	CODE	NUMBER	REV.
MOS MEMORY ARRAY	D	UA	M8728-0-0	C
SCALE 2/1	SHEET 7 OF 8	DIST.	SHO	

TITLE	SIZE	CODE	NUMBER	REV
MOS MEMORY ARRAY	D	UA	M8728-Ø-Ø	C
SCALE 2/1	SHEET 3 OF 8		DIST	

SHO