"THE MATERIAL HEREIN IS FOR INFORMATION PURPOSES ONLY AND IS SUBJECT TO CHANGE WITHOUT NOTICE. DIGITAL EQUIPMENT CORPORATION ASSUMES NO RESPONSIBILITY FOR ANY ERRORS WHICH MAY APPEAR HEREIN."

FIELD MAINTENANCE PRINT SET

"THIS DRAWING AND SPECIFICATIONS, HEREIN, ARE THE PROPERTY OF DIGITAL EQUIPMENT CORPORATION AND SHALL NOT BE REPRODUCED OR COPIED OR USED IN WHOLE OR IN PART AS THE BASIS FOR THE MANUFACTURE OR SALE OF ITEMS WITHOUT WRITTEN PERMISSION. COPYRIGHT © 1982 DIGITAL EQUIPMENT CORPORATION."

TABLE OF CONTENTS

DWG. NUMBER	DESCRIPTION
D-UA-UDA50-0-0	ADAPTER ,UNIBUS DISK
K-PL-UDA50-0-DBP	ADAPTER, UNIBUS DISK
B-DD-M7161-0	UDA #1
D-UA-M7161-0-0	UDA #1
K-PL-M7161-0-DBP	UDA #1
D-CS-M7161-0-UDA1	UDA #1
B-DD-M7162-0	UDA #2
D-UA-M7162-0-0	UDA #2
K-PL-M7162-0-DBP	UDA #2
D-CS-M7162-0-UDA2	UDA#2

UNIT VARIATIONS COVERED BY THIS PRINT SET
UDA50-00

UDA50

Field Maintenance Print Set

Digital Equipment Corporation

Print Set Part Number MP-01331

REVISION HISTORY		
REV.	A	
ECO NUMBER	RELEASED TO ECO CONTROL AT REV A	
DATE		

DRN. K. Dam	DATE 23 FEB 82	TITLE digital
CHK'D. W. Maier	DATE 23 FEB 82	ADAPTER, UNIBUS DISK
DES. ENG. M. A. Richerson	DATE 23 JUN 82	
RESP. ENG. M. A. Richerson	DATE 23 JUN 82	DOCUMENT NUMBER
FIELD SERVICE R. W. Scanlin	DATE 23 JUN 82	SIZE B · CODE TC · NUMBER UDA50-0-1 · REV. A
NEXT HIGHER DOC. —	—	SHEET 1 OF 1

REV A · NUMBER UDA50-0-1 · CODE TC · SIZE B

"THIS DRAWING AND SPECIFICATIONS, HEREIN, ARE THE PROPERTY OF DIGITAL EQUIPMENT CORPORATION AND SHALL NOT BE REPRODUCED OR COPIED OR USED IN WHOLE OR IN PART AS THE BASIS FOR THE MANUFACTURE OR SALE OF ITEMS WITHOUT WRITTEN PERMISSION. COPYRIGHT © 1981 DIGITAL EQUIPMENT CORPORATION"

LEGEND	
PART NO.	VARIATION
UDA50-00	ADAPTER, UNIBUS DISK
UDA50-A	ADAPTER, UNIBUS DISK

NOTES:
1. DO NOT ASSEMBLE ITEMS 6 THRU 12. THIS WILL BE FIELD INSTALLED IN AN EXISTING I/O BULKHEAD WITH AVAILABLE MASS BUS CUTOUT.
2. PROPERLY BAG AND TAG ITEMS FOR SHIPMENT.
3. FOR SPECIFICATIONS, INSTALLATION AND/OR PROCEDURE REFER TO THE UDA50 DISK CONTROLLER USERS GUIDE P/N. EK-UDA50-UG.
4. ITEM 14 (BOOTSTRAP ROM) IS FOR USE IN M9312 MODULE WHEN APPLICABLE, IN PDP/11 CPU'S.
5. ITEM 19 (BOOTSTRAP ROM) IS FOR USE IN CPU MEMORY CONTROLLER MODULE WHEN APPLICABLE IN THE 11/750 CPU'S.
6. FOR ONE UDA50 ASSEMBLY USE "A" HOLES. WHEN TWO UDA50 ASSEMBLIES ARE INSTALLED, USE "A" HOLES ON LEFT BRACKET (PHANTOM VIEW DETAIL D) AND "B" HOLES ON RIGHT BRACKET.

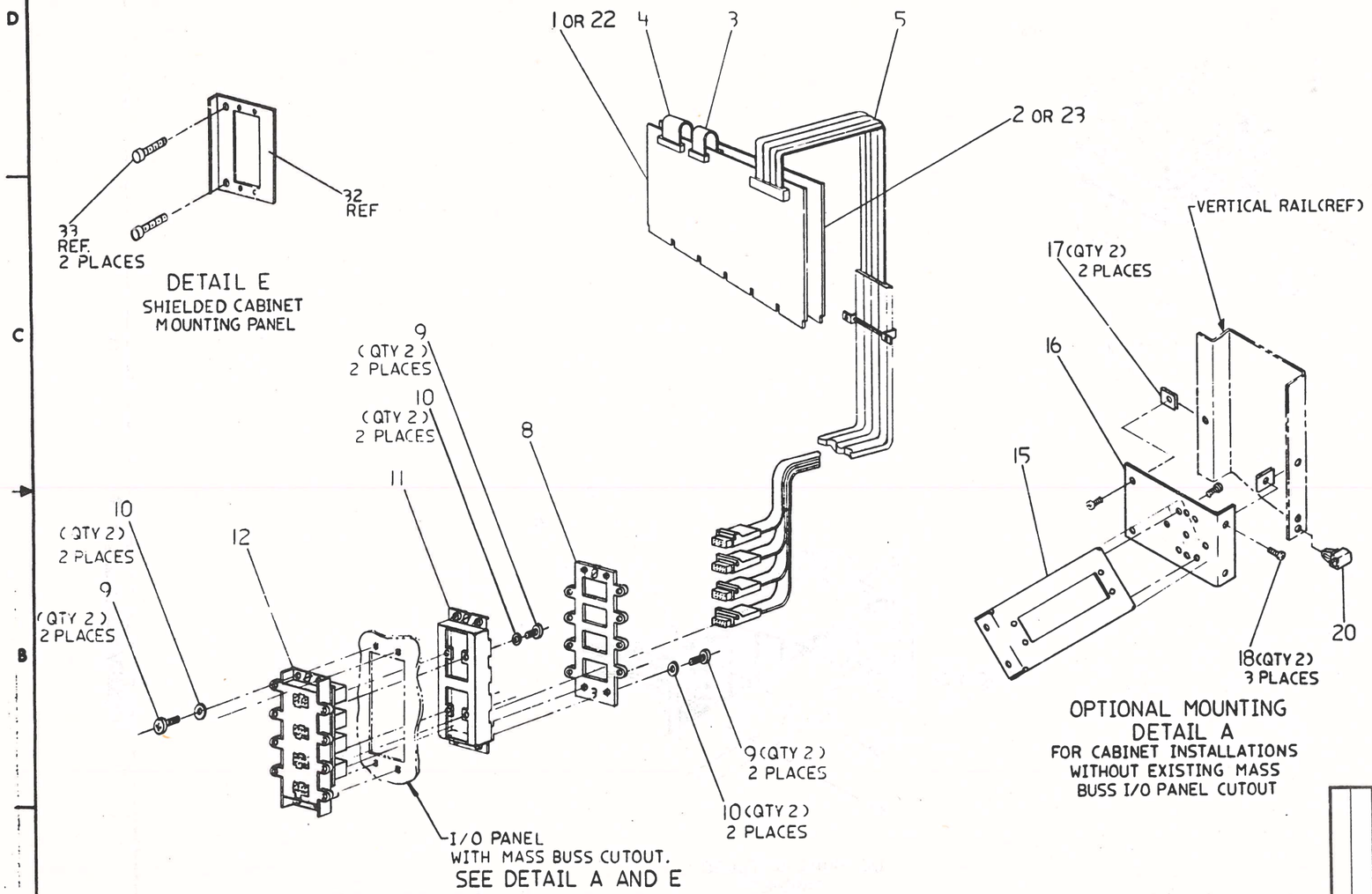

CAUTION: OFF SHEET PARTS LIST EXISTS. SEE K-PL-UDA50-0-DBP (Z2142).

REV	ECO NUMBER	DATE
A	RELEASED TO ECO CONTROL PER PCO UDA50-025	
B	UDA50-CX014 NBELL 26FEB82 R. DUCHARME	1397 A
C	UDA50-CX002 29OCT82 AP R. DUCHARME	1561
D	UDA50-CX003 WS 10 NOV 82 J. WARDELL	1726
E	UDA50-CX004 FLS MAY 83 A. CLARK	1864

	DESCRIPTION	DRAWING NO.	PART NO.	ITEM NO.
QUANTITY & VARIATION				

UNLESS OTHERWISE SPECIFIED DIMENSIONS ARE IN INCHES AND THE FOLLOWING TOLERANCES APPLY (PER DEC STD 114)

INCHES TOLERANCES	ANGLES ±0° 30'	APPLICABLE DIMENSION RANGE (CHECK ONE)	OVER 0 TO 0.2	OVER 0.2 TO 1.2	OVER 1.2 TO 4.0	OVER 4.0 TO 12.0	OVER 12.0 TO 40.0	OVER 40.0 TO 80.0
.X = ± .1	SURFACE QUALITY	☐	± .02		± .03	± .05	± .10	
.XX = ± .02	✓	☐	± .004	± .006	± .012	± .016	± .024	± .04
.XXX = ± .005	MICROINCHES	☐						

THIRD ANGLE PROJECTION

DO NOT SCALE DRAWING

REMOVE BURRS AND BREAK SHARP CORNERS

MATERIAL: SEE PARTS LIST

FINISH

DRN	R. Duchaine	DATE 13 SEPT 81
CHK'D	W.C.M.	DATE 18 SEP 81
DES. ENG.	R. Duchaine	DATE 17 Sep 81
RESP. ENG.	M. Richman	DATE 18 Sep 81
MFG. ENG.	Tom Pilge	DATE 18 Sep 81
NEXT HIGHER DOC	D-UA-RUA80-C-0	

TITLE: ADAPTER, UNIBUS DISK

digital

DOCUMENT NUMBER: SIZE D, CODE UA, NUMBER UDA50-0-0, REV. E

SCALE NONE, SHEET 1 OF 5

DRD 100D

"THIS DRAWING AND SPECIFICATIONS HEREIN ARE THE PROPERTY OF DIGITAL EQUIPMENT CORPORATION AND SHALL NOT BE REPRODUCED OR COPIED OR USED IN WHOLE OR IN PART AS THE BASIS FOR THE MANUFACTURE OR SALE OF ITEMS WITHOUT WRITTEN PERMISSION
COPYRIGHT © 1982 DIGITAL EQUIPMENT CORPORATION"

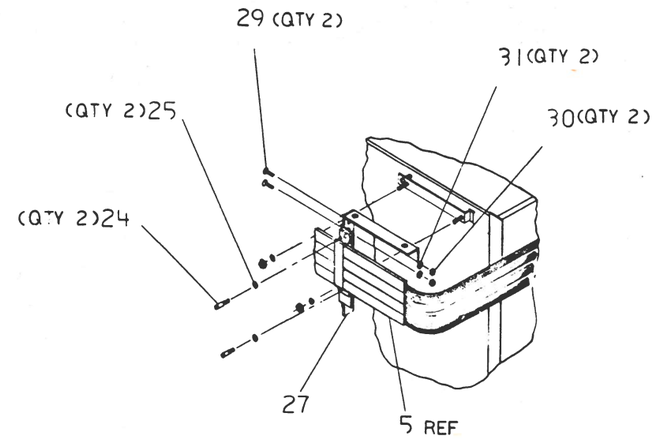

DETAIL B

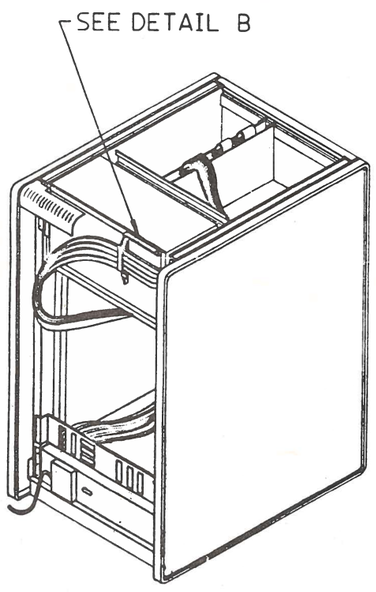

UNSHIELDED CABINET

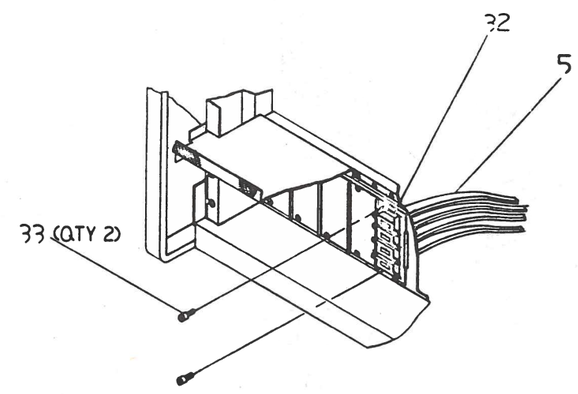

I/O PANEL, SHIELDED CABINET

UDA50 INSTALLATION INTO 11/44 AND 11X44 SHIELDED AND UNSHIELDED CABINETS

REVISION HISTORY		
DATE	ECO NUMBER	REV

TITLE ADAPTER, UNIBUS DISK

DOCUMENT NUMBER			
SIZE	CODE	NUMBER	REV
D	UA	UDA50-0-0	E
SCALE NONE		SHEET 2 OF 5	

DRD 1000

1982

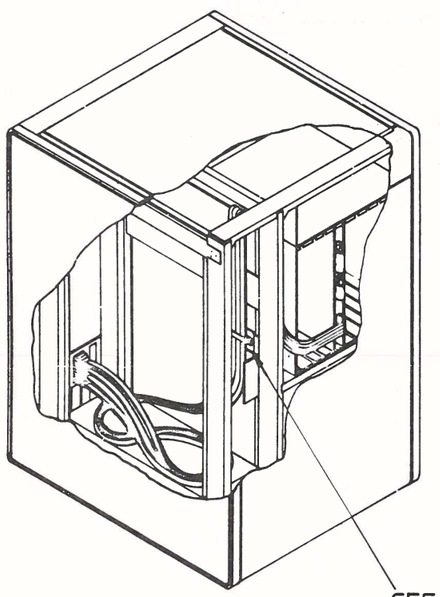

CABINET, UNSHIELDED

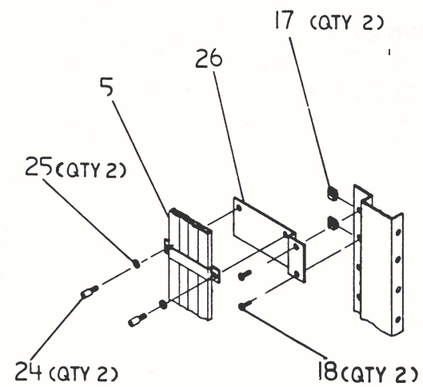

DETAIL C

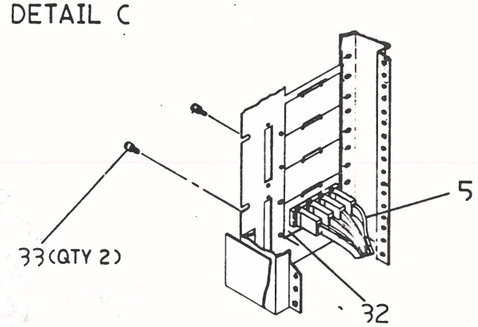

I/O PANEL, SHIELDED
CABINET

UDA50 INSTALLATION INTO
11/750 CABINET, SHIELDED
AND UNSHIEDED

REVISION HISTORY		
DATE	REV NUMBER	REV

TITLE ADAPTER, UNIBUS DISK

DOCUMENT NUMBER: D UA UDA50-0-0 E

SCALE NONE SHEET 3 OF 5

D UA UDA50-0-0 E

THIS DRAWING AND SPECIFICATIONS HEREIN ARE THE PROPERTY OF DIGITAL EQUIPMENT CORPORATION AND SHALL NOT BE REPRODUCED OR COPIED OR USED IN WHOLE OR IN PART AS THE BASIS FOR THE MANUFACTURE OR SALE OF ITEMS WITHOUT WRITTEN PERMISSION
COPYRIGHT © 1983 DIGITAL EQUIPMENT CORPORATION

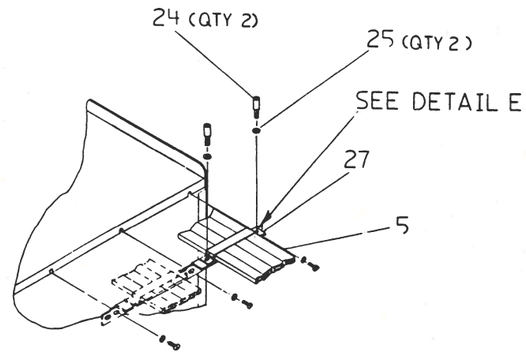

DETAIL D

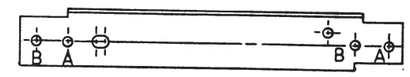

DETAIL E
SEE NOTE 6

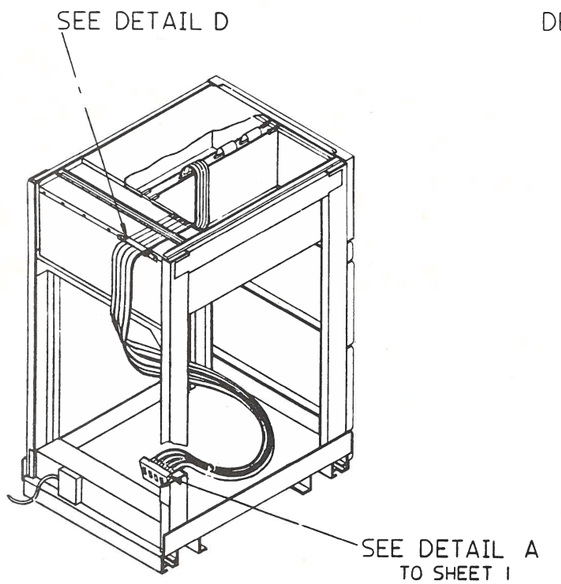

EXPANDER CABINET
UNSHIELDED

UDA50 INSTALLATION INTO
11/750 EXPANDER CABINET,
SHIELDED AND UNSHIELDED

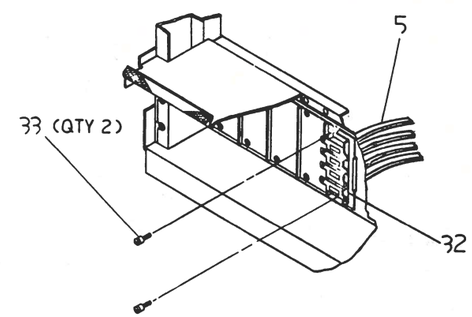

MOUNTING PLATE, I/O PANEL OF
SHIELDED CABINET

REVISION HISTORY		
DATE	ECO NUMBER	REV

TITLE ADAPTER,
UNIBUS DISK

DOCUMENT NUMBER			
SIZE	CODE	NUMBER	REV.
D	UA	UDA50-0-0	E
SCALE NONE		SHEET 4 OF 5	

DRD 137A

THIS DRAWING AND SPECIFICATIONS HEREIN ARE THE PROPERTY OF DIGITAL EQUIPMENT CORPORATION AND SHALL NOT BE REPRODUCED OR COPIED OR USED IN WHOLE OR IN PART AS THE BASIS FOR THE MANUFACTURE OR SALE OF ITEMS WITHOUT WRITTEN PERMISSION
COPYRIGHT © 1982 DIGITAL EQUIPMENT CORPORATION

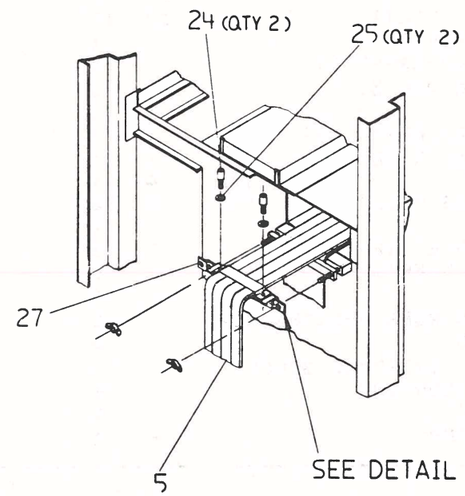

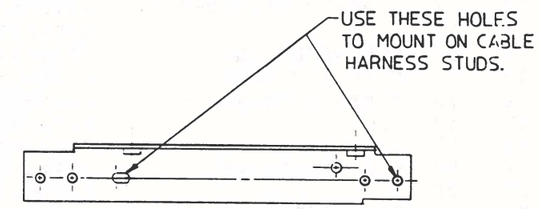

DETAIL F

UDA 50 INSTALLATION INTO
11/40 AND 11/70 CABINET.
FOR BULKHEAD MOUNTING, SEE DETAIL A
SHEET 1

REVISION HISTORY		
DATE	ECO NUMBER	REV

TITLE ADAPTER, UNIBUS DISK

DOCUMENT NUMBER			
SIZE	CODE	NUMBER	REV
D	UA	UDA50 - 0 - 0	E
SCALE NONE		SHEET 5 OF 5	

DRD 137A

AUTOMATED BY PRTLST.4Q(47)

P A R T S L I S T

LINE	ITEM	TOP DOCUMENT	PART NUMBER	MIN REV	DESCRIPTION	QTY PER VARIATION 00	A
1	1	D-UA-M7162-0-0	M7162-00		UDA#2 (UNIBUS DISK ADAPTER BOARD	1	-
2	2	D-UA-M7161-0-0	M7161-YA		M7161 W BLASTED ROM'S,4-LAYER HE	1	-
3	3	C-IA-7018447-0-0	7018447-00		40 PIN FLAT CABLE ASSEMBLY	1	1
4	4	C-IA-7018448-0-0	7018448-00		50 PIN FLAT CABLE ASSEMBLY	1	1
5	5	D-AD-7020516-0-0	7020516-01		UDA CABLE AND GROUNDING ASSEMBLY	1	1
6	6		9007032-00		*** THIS ITEM IS NOT USED ***	-	-
7	7	C-MD-7426095-0-0	7426095-01		*** THIS ITEM IS NOT USED ***	-	-
8	8	C-MD-7426090-0-0	7426090-01		MOUNT,REAR CONN.	1	1
9	9		9006011-01		SCREW,MACH PAN PHIL 4-	12	12
10	10		9006688-00		WASHER,HELICAL SPLIT SST	12	12
11	11	D-IA-7426094-0-0	7426094-01		HOUSING,REAR SHIELD	1	1
12	12	C-AD-7018454-0-0	7018454-01		UDA BULKHEAD SUB-ASSEMBLY	1	1
13	13		3700652-01		PKG. KIT OPTION UDA 50	1	1
14	14	SEE NOTES 1&5	23767A9-00		A9-01	1	1
15	15	D-IA-7425425-0-0	7425425-01		BULKHEAD,I/O UDA,RETMA MNT	1	1
16	16	C-MD-7425426-0-0	7425426-01		BRACKET,VERTICAL RAIL	1	1
17	17		9007786-00		RETAINER,U-NUT 10-32X	4	4
18	18		9009700-00		SCREW,SEMS TRUSS PHIL 10-	6	6
19	19	SEE NOTES 2&5	23990A9-00		A9-01	1	1
20	20		9007867-00		MOUNT, PUSH,CABLE TIE	3	3
21	21	SEE NOTES 3&4			DISK CONTROLER USER'S GUIDE	1	1
22	22	D-UA-M7486-0-0	M7486-00		UDA SI	-	1
23	23	D-UA-M7485-0-0	M7485-YA		M7485 W/BLASTED ROMS,4-LAYER HEX	-	1
24	24		7427791-01	A	MOUNT,GROUNDING	-	2
25	25		9006634-00	CR	WASHER,LOCK INTERNAL STEEL	-	2
26	26		7427505-01	CR	BRACKET,CABLE MOUNTING	-	1
27	27		7427503-01	CR	ANGLE,GROUNDING	-	1
28	28		7427504-01	CR	BRACKET,GROUNDING	-	1

REVISION HISTORY			BASIC PART NO: UDA50			
ENG	ECO NUMBER	REV	SECTION A OF A	DRN: R. DUCHARME	DATE: 02 FEB 81	D I G I T A L
RD	INITIAL	A	SECTION,VARIATION INDEX	CHK'D: W.C.M.	DATE: 15 SEP 81	TITLE PARTS LIST ADAPTER, UNIBUS DISK
BD	UDA50-CX001	B	[A]00,A			
RD	UDA50-CX002	C				
JW	UDA50-CX003	D	[B]	DES.ENG: R. DUCHARME	DATE: 15 SEP 81	DOCUMENT NUMBER
TK	UDA50-CX004	E				SIZE / CODE / NUMBER / REV
			[C]			
				RESP.ENG.: W. MATHRANI	DATE: 15 SEP 81	K / PL / UDA50-0-DBP / E
			[D]			
			[E]	MFG.ENG.: K. SHAHEED	DATE: 15 SEP 81	RELEASE DATE:
			[F]	ASSEMBLY NUMBER: D-UA-UDA50-0-0	TOP DOCUMENT NUMBER: B-DD-UDA50-0-0	FILE NAME: Z2142E.PLS / EDIT #: 9

"THIS DRAWING AND THE SPECIFICATIONS CONTAINED HEREIN ARE CONFIDENTIAL AND PROPRIETARY. THEY ARE THE PROPERTY OF DIGITAL EQUIPMENT CORPORATION AND SHALL NOT BE REPRODUCED OR COPIED OR USED IN WHOLE OR IN PART AS THE BASIS FOR THE MANUFACTURE OR SALE OF ITEMS WITHOUT WRITTEN PERMISSION. THIS IS AN UNPUBLISHED WORK PROTECTED UNDER THE FEDERAL COPYRIGHT LAWS."

LINE	ITEM	TOP DOCUMENT	PART NUMBER	MIN REV	DESCRIPTION	QTY PER VARIATION 00	A
29	29		9006024-01	CR	SCREW,MACH PAN PHIL 6-	-	2
30	30		9006558-00	CR	NUT,HEX 6-32X .307AF CS/C	-	2
31	31		9006633-00	CR	WASHER,LOCK INTERNAL STEEL	-	2
32	32		7426407-05	CR	PANEL,DOUBLE (MASS BUS)	--	1
33	33		1219534-01		SCREW, CAPTV SLOT 4-	-	2

34 NOTE: -1. SEE NOTE 4 ON ASSEMBLY DRAWING (D-UA-UDA50-0-0).
35 NOTE: -2. SEE NOTE 5 ON ASSEMBLY DRAWING (D-UA-UDA50-0-0).
36 NOTE: -3. SEE NOTE 3 ON ASSEMBLY DRAWING (D-UA-UDA50-0-0).
37 NOTE: -5. PROPER DESCRIPTION SHOULD BE 'BOOTSTRAP ROM'.
38 NOTE: -4. ITEM 21, P/N EK-UDA50-UG NOT IN MPF AT TIME OF RELEASE

SIZE	CODE	NUMBER	REV.
B	DD	M7161-0	A

DRAWING NO.	NO. OF SHTS.	PART NO.	DESCRIPTION	REVISIONS
B-DD-M7161-0	1		UDA NO. 1 - NO ROMS	A
D-UA-M7161-0-0	2		UDA NO. 1 - NO ROMS	A
K-CS-M7161-0-UDA1	1		UDA NO. 1 "	B
K-CS-M7161-0-UDA2	1		UDA NO. 1 "	B
K-CS-M7161-0-UDA3	1		UDA NO. 1 "	B
K-CS-M7161-0-UDA4	1		UDA NO. 1 "	B
K-CS-M7161-0-UDA5	1		UDA NO. 1 "	B
K-CS-M7161-0-UDA6	1		UDA NO. 1 "	B
K-CS-M7161-0-UDA7	1		UDA NO. 1 "	B
K-CS-M7161-0-UDA8	1		UDA NO. 1 "	B
K-CS-M7161-0-UDA9	1		UDA NO. 1 "	B
K-CS-M7161-0-UDAA	1		UDA NO. 1 "	B
K-CS-M7161-0-UDAB	1		UDA NO. 1 "	B
K-CS-M7161-0-UDAC	1		UDA NO. 1 "	B
K-CS-M7161-0-UDAD	1		UDA NO. 1 "	B
K-CS-M7161-0-UDAE	1		UDA NO. 1 "	B
K-CS-M7161-0-UDAF	1		UDA NO. 1 - NO ROMS	B
K-CS-M7161-0-DBS	-		SUDS DATA BASE	B
K-PL-M7161-0-DBP	-		UDA NO. 1 - NO ROMS	A
K-PC-M7161-0-DBC	-		P.C. DESIGN DATA BASE	A
		5014040-00	ETCH BOARD	B
D-EC-5014040-0-0	2		ETCH CUT DRAWING	A
D-MD-5014040-0-0	5		DRILL AND ETCH DRAWING	A

NOTES:

1. M7161 consists of other variations (YA)
   5014040 is the Etch Board for all variations.

REVISIONS	
REV.	A
CHG NO.	INIT
DATE	

"THIS DRAWING AND SPECIFICATIONS, HEREIN, ARE THE PROPERTY OF DIGITAL EQUIPMENT CORPORATION AND SHALL NOT BE REPRODUCED OR COPIED OR USED IN WHOLE OR IN PART AS THE BASIS FOR THE MANUFACTURE OR SALE OF ITEMS WITHOUT WRITTEN PERMISSION.

COPYRIGHT© 1980 DIGITAL EQUIPMENT CORPORATION

digital

USED ON OPTION/MODEL	
RA80	

DRN.		
CHK'D		
ENG.		11 Jun 81
PROD.		16 JUN 81

TITLE: UDA NO. 1 - No Roms

SIZE	CODE	NUMBER	REV.
B	DD	M7161-0	A

SHEET 1 OF 1

DRB 126

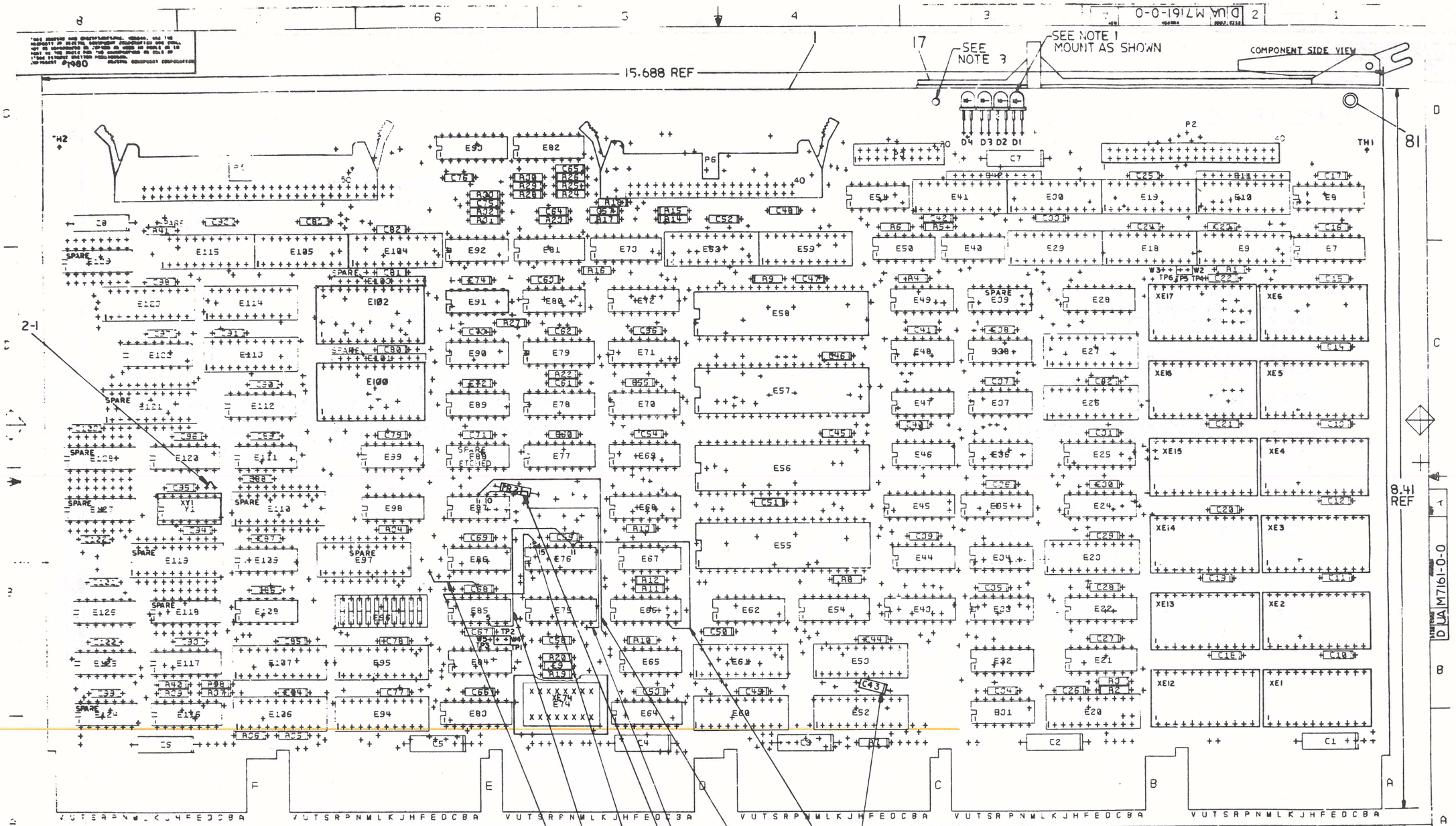

NOTES:

1. D1, D2, D3 & D4 TO BE MOUNTED ON COMPONENT SIDE, LONGER LEG TO RIGHT. LEAVE LEADS APPROX .18 LONG.
2. THE FOLLOWING ARE SPARES OR UNUSED: E39, E88, E97, E110, E118, E119, E121, E124, E127, E128, E129, R41, E101, E103. (E88 IS ETCHED IN)
3. DO NOT INSTALL EYELET (ITEM 81) IN POSITION SHOWN.

STEP E + Y AXIS N/A STEP ___ TIMES
STEP F + Y AXIS N/A STEP ___ TIMES

CHANGE NO.	REV
	A

ETCH REV. B

SIGNATURES	DATE
DRN.	
CHK'D.	
MECH. ENG.	
PROJ. ENG.	
PROD.	

SCALE 2/1
SHT. 1 OF 2
NEXT HIGHER ASSY. B-DD-M7161-0

digital

TITLE UDA NO. 1 - NO ROMS

SIZE	CODE	NUMBER	REV
D	UA	M7161-0-0	A

MS# 291100

THIS DRAWING AND SPECIFICATIONS, HEREIN, ARE THE PROPERTY OF "DIGITAL EQUIPMENT CORPORATION" AND SHALL NOT BE REPRODUCED OR COPIED OR USED IN WHOLE OR IN PART AS THE BASIS FOR THE MANUFACTURE OR SALE OF ITEMS WITHOUT WRITTEN PERMISSION.
COPYRIGHT © 1981 DIGITAL EQUIPMENT CORPORATION

LEGEND:
0-XX = PCO-UDA 001.
1-XX = PCO-UDA 004.
2-XX = PCO-UDA 011.

REWORK INSTRUCTIONS-INITIAL RELEASE

0-1.
0-2.
0-3.
0-4. SEE D-EC-5014040-0-0
0-5.
0-6.
0-7.

WIRE ADDS-COMPONENT SIDE AS SHOWN:

0-8. FROM PTH ABOVE C68 TO PTH TO LEFT OF E86-1.
0-9. FROM E85-5 TO E76-11.
1-10. FROM E76-15 TO PTH ON LEFT OF E85.
1-11. FROM PTH BELOW E75-7&8 TO E87-10.
0-12. FROM E87-11 TO PTH BELOW E66 & E75.
0-13. FROM E66-7 TO E76-11.

COMPONENT DELETES:

1-14. DELETE CAPACITOR C70 (1012784).
1-15. RESISTOR R42 (1300447).
1-16. I.C. SOCKET XE55 (1215006-08).
1-17. XE56
1-18. XE57
1-19. XE58 -08).
1-20. XE91 -01).
1-21. XE100 -06).
1-22. XE102 -06).
1-23. DELETE I.C. SOCKET XE108 (1215006-01).

COMPONENT ADDS:

1-24. ADD RESISTOR R2 (1300229).
1-25. R12 (1300229).
1-26. R3 (1301972).
1-27. RESISTOR R11 (1301972).
1-28. I.C. (23013F4-01) E100.
1-29. ADD I.C. (23014F4-01) E102.

1-30. REMOVE RESISTOR R7-1300316 AND REPLACE WITH 1300365.
1-31. R24-1302379 1312929.
1-32. R25- 1312929.
1-33. R33- 1312929.
1-34. R14- 1302377.
1-35. R17-
1-36. R27-
1-37. R29-
1-38. R30-
1-39. R31-
1-40. RESISTOR R32-1302379 1302377.
1-41. I.C. Y1-1811660-24 1811660-16.
1-42. E35-1912847 1910548.
1-43. E68-
1-44. E69-
1-45. E70-
1-46. I.C. E71-1912847 1910548.
1-47. REMOVE CAPACITOR C43-1012784 AND REPLACE WITH 1013466-11. MOUNT IN PTH ABOVE E52-12 & PTH BELOW E53-5 AS SHOWN.
1-48. REMOVE RESISTOR R21-1300479 AND REPLACE WITH 1300417. MOUNT IN PTH BELOW E77-2 & PTH ABOVE E87-9 AS SHOWN.

WIRE ADDS-COMPONENT SIDE AS SHOWN:

2-1. FROM PTH ABOVE Y1-8 TO PTH ABOVE Y1-9.

REVISION HISTORY		
DATE	ECO NUMBER	REV

TITLE: UDA NO.1-NO ROMS

SIZE	CODE	DOCUMENT NUMBER	REV
D	UA	M7161-0-0	A

SCALE — SHEET 2 OF 2

AUTOMATED BY PRTLST.3P(44)

P A R T S L I S T

LINE	ITEM	DOCUMENT NUMBER	PART NUMBER	DESCRIPTION	QTY PER VARIATION 00	REFERENCE DESIGNATOR
1	1	D-MD-5014040-0-0	5014040-00	UDA NO. 1	1	
2	2		1012784-00	.047 MFD 50V +80-20% CER	92	C10-C42,C44-C69,C71-C103
3	3		1013466-08	680.0 MMF 50V 10% X7R CER	1	C9
4	4		1013466-11	.22 MFD 50V +80-20% Z5U CER	1	C43
5	5		1016549-00	47 MFD 10V +50-10% AL EL	8	C1,C2,C3,C4,C5,C6,C7,C8
6	6		1112689-00	LED .8MCD@16MA VF=5V	4	D1,D2,D3,D4
7	7		1209838-00	SKT,IC 16PIN DIP GOLD PLATE	1	XE74
8	8		1210385-01	PIN 1POS WIRE WRAP	6	TP1,TP2,TP3,TP4,TP5,TP6
9	9		1211164-06	SW,DIP 1P 1A 10POS	1	E96
10	10		1212965-04	HEADER 20POS	1	P3
11	11		1214314-00	CONN 2POS JUMPER	2	W2,W4
12	12		1214993-00	HEADER 40POS RT ANGLE SHIELD	1	P2
13	13		1215006-01	SKT,IC 14PIN DIP TIN PLATE	1	XY1
14	14		1215006-06	SKT,IC 24PIN DIP TIN PLATE	12	XE1-XE6,XE12-XE17
15	15		1216832-02	HEADER 40POS WITH LATCHES	1	P6
16	16		1216832-03	HEADER 50POS WITH LATCHES	1	P5
17	17		1216988-02	HANDLE,MODULE,HEX TWO EJECTORS	1	
18	18		1300229-00	100.0 .25 W 5.0 % CC	7	R4,R5,R6,R22,R34,R2,R12
19	19		1300316-00	470.0 .25 W 5.0 % CC	4	R8,R9,R13,R20
20	20		1300365-00	1.0 K .25 W 5.0 % CC	4	R1,R10,R19,R7
21	21		1300417-00	2.20 K .25 W 5.0 % CC	1	R21
22	22		1301972-00	270.0 .25 W 5.0 % CC	2	R3,R11
23	23		1302377-00	39.0 .25 W 5.0 % CC	7	R14,R17,R27,R29,R30,R31,R32
24	24		1302379-00	75.0 .25 W 5.0 % CC	6	R15,R16,R18,R23,R26,R28
25	25		1305125-00	383.0 .25 W 1.0 % RN55D-F10	2	R36,R40
26	26		1311422-00	178.0 .25 W 1.0 % RN55D-F10	4	R35,R37,R38,R39
27	27		1312114-00	R NETWORK 8-1.39K 5.0 % 10PIN	1	E11
28	28		1312929-00	62.0 .25 W 5.0 % CC	3	R24,R25,R33
29	29		1316395-00	R NETWORK 9-4.7K 2.0 % 10PIN	1	E42
30	30		1617533-00	DELAY= 250NS,5TAPS 14PIN DIP	1	E108

REVISION HISTORY			BASIC PART NO: M7161											
ENG	ECO NUMBER	REV	SECTION A OF A	DRN: R. MICHAUD	DATE: 11-NOV-80	D	I	G	I	T	A	L		
	INITIAL	A	SECTION,VARIATION INDEX	CHK'D: C. RIDGEWAY	DATE: 11-NOV-80	TITLE PARTS LIST								
			[A] 00			UDA NO. 1 - NO ROMS								
			[B]											
			[C]	DES.ENG: C. RIDGEWAY	DATE: 11-NOV-80									
			[D]											
			[E]			DOCUMENT NUMBER								
			[F]	RESP.ENG.: B. MATHRANI	DATE: 11-NOV-80									
			[H]			SIZE	CODE	NUMBER			REV			
			[J]											
			[K]	MFG.ENG.: D. SWIFT	DATE: 11-NOV-80	K	PL	M7161-0-DBP			A			
			[L]											
			[M]	ASSEMBLY NUMBER:	TOP DOCUMENT NUMBER:	FILE NAME:					EDIT #			
			[N]	D-UA-M7161-0-0	# B-DD-M7161-0	Z1748A.PLS					27			

*THIS DRAWING AND SPECIFICATIONS HEREIN, ARE THE PROPERTY OF DIGITAL EQUIPMENT CORPORATION AND SHALL NOT BE REPRODUCED OR COPIED OR USED IN WHOLE OR IN PART AS THE BASIS FOR THE MANUFACTURE OR SALE OF ITEMS WITHOUT WRITTEN PERMISSION.
COPYRIGHT (C) 1981, DIGITAL EQUIPMENT CORPORATION *

LINE	ITEM	DOCUMENT NUMBER	PART NUMBER	DESCRIPTION	QTY PER VARIATION 00	REFERENCE DESIGNATOR
31	31		1618344-00	DELAY= 58NS,5TAPS	1	E91
32	32		1811660-16	OSCILLATOR, XTAL 17.280 MHZ	1	Y1
33	33		1909705-00	DEC 8881 NAND GATE-QUAD 2IN O	1	E84
34	34		1910532-00	74S00 NAND GATE-QUAD 2IN	2	E33,E47
35	35		1910534-00	74S04 INVERTER GATE-HEX 1I	2	E80,E92
36	36		1910536-00	74S10 NAND GATE-TRIPLE 3IN	1	E90
37	37		1910537-00	74S11 AND GATE-TRIPLE 3INP	1	E46
38	38		1910542-00	74S64 A-O-I GATE 4-2-3-2	2	E44,E89
39	39		1910544-00	74S74 FF-D DUAL,EDGE TRIGG	1	E51
40	40		1910545-00	74S112 FF-JK DUAL,EDGE TRIG	1	E120
41	41		1910546-00	74S140 NAND GATE-DUAL 4INPU	1	E50
42	42		1910548-00	74S157 MUX 1 OF 2 (QUAD)	5	E35,E68,E69,E70,E71
43	43		1910550-00	74S174 FF-D HEX	6	E7,E8,E21,E22,E24,E25
44	44		1910552-00	74S194 SHIFT REG.,4BIT RIGH	2	E54,E62
45	45		1910950-00	74S74 FF-D DUAL (-45 VERSI	1	E40
46	46		1911116-00	DEC 8837 RECEIVER,BUS,HEX,UN	1	E64
47	47		1911579-00	8641 TRANSCEIVER,BUS,QUA	1	E83
48	48		1911675-00	74S138 DECODER/DEMUX 3-8 LIN	3	E73,E82,E93
49	49		1911676-00	74S139 DECODER-DUAL TWO-INP	2	E43,E81
50	50		1911712-00	74S51 AND-OR GATE-INVERT D	1	E49
51	51		1911983-00	74S133 NAND GATE-POSITIVE 1	1	E28
52	52		1912097-00	SN 74S182 LOOK AHD CARRY GEN	1	E45
53	53		1912388-00	74S02 NOR GATE-QUAD 2IN,PO	2	E67,E126
54	54		1912389-00	74S08 AND GATE-QUAD 2IN,PO	2	E48,E86
55	55		1912728-00	74S251 MUX 1 OF 8 TRI-STA	4	E72,E77,E78,E79
56	56		1912799-00	LS00 NAND-GATE-QUAD 2IN,P	1	E98
57	57		1912803-00	74LS04 INVERTER GATE,HEX	2	E85,E109
58	58		1912808-00	LS11 AND GATE-TRIPLE 3IN	1	E65
59	59		1912820-00	LS51 A-O-I GATE 2-WIDE 2I	1	E99
60	60		1912824-00	LS74 FF-D DUAL,EDGE TRIGG	1	E125
61	61		1912842-00	LS138 DECODER-THREE INPUT,	1	E75
62	62		1912860-00	LS259 LATCH 8BIT	1	E66
63	63		1912863-00	LS273 FF-D OCTAL W/CLEAR	3	E20,E41,E104
64	64		1912864-00	LS279 LATCH,QUAD-S-R	1	E76
65	65		1913040-00	DC 005 TRANSCEIVER 4BIT	4	E94,E95,E106,E107
66	66		1913245-02	2901A-1 MICROPRESCESSOR 4-	4	E55,F56,E57,E58
67	67		1913414-00	LS14 INVERTER GATE-HEX SC	1	E87
68	68		1913939-00	LS191 COUNTER,SYNCHR. UP/D	2	E112,E122
69	69		1914214-00	LS374 FF-D OCTAL EDGE TRIG	6	E23,E26,E27,E113,E114,E123
70	70		1914438-00	DC 013 UNIBUS INTERRRUPT-BIP	2	E116,E117
71	71		1914451-00	74LS393 COUNTER,BINARY,4BIT	1	E111
72	72		1915193-00	LS244 DRIVER,LINE,OCTAL,T	2	E59,E63
73	73		1915218-00	LS245 TRANSCEIVER,BUS,OCT	2	E105,E115
74	74		1915305-00	AM 2908 TRANSCEIVER,BUS,LATCH	4	E52,E53,E60,E61
75	75		1916680-01	2911A MICROPROGRAM SEQUENC	6	E9,E10,E18,E19,E29,E30
76	76		1917956-00	74LS280N PARITY GEN/CHK,9BIT	6	E31,E32,E34,E36,E37,E38
77	77		23301E2-00	E2-06	1	E100
78	78		23302E2-00	E2-06	1	E102

D	I	G	I	T	A	L	TITLE	SECTION A OF A	SIZE	CODE	DOCUMENT NUMBER	REV
							UDA NO. 1 - NO ROMS		K	PL	M7161-0-DBP	A

LINE	ITEM	DOCUMENT NUMBER	PART NUMBER	DESCRIPTION	QTY PER VARIATION 00	REFERENCE DESIGNATOR
79	79		4901259-00	ADHESIVE KIT,ETHYL CYANOACRYLATE	A/R	
80	80		5408778-00	PLUG PRIORITY	1	E74
81	81		9000024-01	EYELET,ROLL FLANGE .1210DX .192	11	
82	82		9009157-00	ADH,LIQ.RM.TEMP CURING COLORLESS	A/R	
83	83		9105740-55	WIRE(WRAP)30AWG UL1423	A/R	

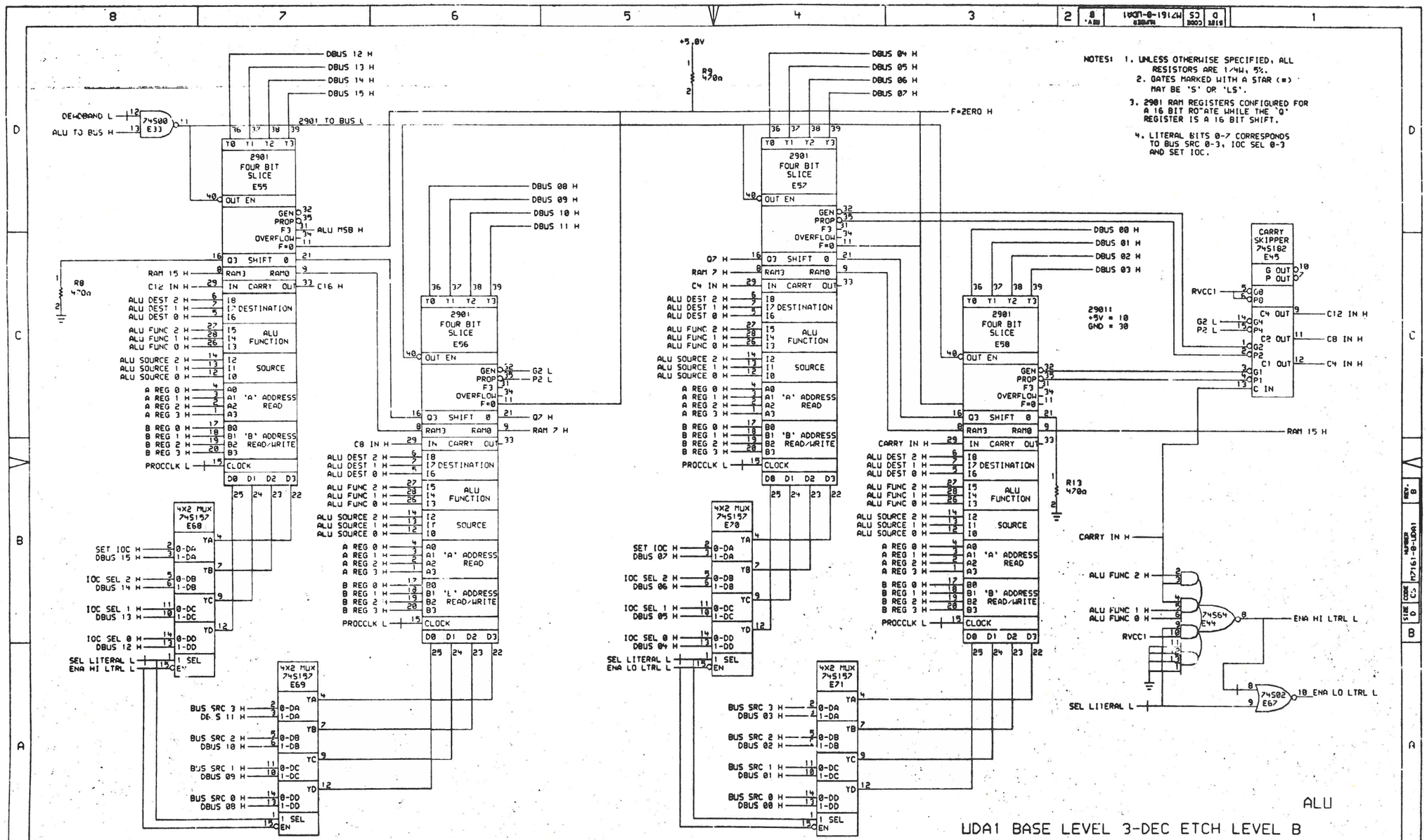

REVISIONS		
CHK	CHANGE NO.	REV
	RELEASED TO DAS CONTROL AT REV B.	B

THIS DRAWING AND SPECIFICATIONS, HEREIN, ARE THE PROPERTY OF DIGITAL EQUIPMENT CORPORATION AND SHALL NOT BE REPRODUCED OR COPIED OR USED IN WHOLE OR IN PART AS THE BASIS FOR THE MANUFACTURE OR SALE OF ITEMS WITHOUT WRITTEN PERMISSION. COPYRIGHT © 1981, DIGITAL EQUIPMENT CORPORATION.

digital

SUDS:(BOHEN)UDA1C1, DRW 11-MAR-81 18:13

FIRST USED ON OPTION/MODEL: UDA

DRN.	DATE 17-MAR-81	ENG.
CHK'D.	DATE	BOARD LOCATION:
		SHEET OF 12
NEXT HIGHER ASSEMBLY:		

TITLE: UDA #1 NO ROMS

SIZE	CODE	NUMBER	REV.
D	CS	M7161-0-UDA1	B

NOTE: 1. JUMPER EXT.FAIL H HIGH TO FORCE SEQUENCERS TO INCREMENT.
2. CLOCK DRIVER DESIGNED TO ACCEPT 74S140,74S00,74S37,AND 74S38.
3. CLOCK TERMINATORS TO BE LOCATED AT THE OPPOSITE END OF THE RUN FROM THE DRIVER.
4. THE CLOCKING IS WRONG IF DEADBAND L IS <XX OR >XX NSEC.

NOTE: X11 IS THE 14 PIN SOCKET TO BE USED WITH T1.

DIVIDE BY 3:
1 UP AND 2 DOWN= CLK ENB H

17.28 MHZ CRYSTAL OSC T1 — CLK — W1

74S112 E120 — 74S112 E120 — RVCC1

EXT.HALT L
REQSTOP L

E91 — 74S74 E51 — 74S04 E80 — R16 75Ω — DLY UPROC H

CLK ENB5 H
CLK ENB4 H
CLK ENB3 H
CLK ENB2 H
CLK ENB1 H
CLK ENB H
CLK ENB L

R27 39Ω — CLK BDR H

74S00 E33

UNIBUS PROC — UPROC H
DRIVE PROC — UPROC L

74S74 E51

BUS SOURCE 0-7

DECODER 74S138 E73

RD BS0 L
RD CNST L
RD BUFFER L
RD UCR L
RD UBDATA L
RD SERDES L
RD ECC RSDU L
RD RTDS L

R17 39Ω — R18 75Ω — R14 39Ω — R15 75Ω

BUS SRC 2 H
BUS SRC 1 H
BUS SRC 0 H
GND
ALU TO BUS H
SEL
EN

DEADBAND L

8 D FLOP 74LS273 E41

EXT.RST L — D0 — 0R — RST1 L
RST1 L — D1 — 1R — RST2 L
RST2 L — D2 — 2R
EXT.STOP L — D3 — 3R
D4 — 4R
D5 — 5R
D6 — 6R
D7 — 7R
BUS RST L — CLR
CLK

74S140 E50 — RVCC1

74S00 E48 — ENBL UPROC H
74S00 E48 — ENBL DPROC H

SEQ CLK L
PROCCLK L
SHORTEST RUN POSSIBLE

74S140 E50

74S00 E33

74S04 E92 — R32 39Ω — CLK SERDES H

STOP L

74LS14 E87

COND EXEC H
PASS TEST L
EXEC ON TRUE H
74S64 E89 — EXECUTE H
PASS TEST H
EXEC ON FALSE H

74LS14 E87

INFC OUTPUT CONTROL CLK

DECODER 74S139 E81

CLK DIOC L — R23 75Ω
CLK UIOC L
IOC ENABLE H
SEL
EN

74S04 E80

RESET L
FAIL L

DFAIL H
UPROC L
EXT.FAIL H
74S51 E49 — R4 100Ω

74S10 E90

RD UBDATA L
PROCCLK L
74S02 E67

LD UBDATA L
74S04 E92
74S02 E67 — R/W UBDATA L

COMMON BUS DESTINATION 0-7

DECODER 74S138 E93

LD BD1 L
LD BUFFER L

R30 39Ω

BUS DEST 2 H
BUS DEST 1 H
BUS DEST 0 H
GND
CLK ENB1 H
SEL
EN

+5.0V

R3 270Ω — R11 270Ω
R2 100Ω — R12 100Ω

PROCCLK L
SEQ CLK L

BUS DESTINATION ENABLE 0-3

DECODER 74S139 E81

ENB PAR L

UPROC/MPROS BD 4-7

DECODER 74S138 E82

LD DCR L — R28 75Ω
LD RTCS L — R29 39Ω
LD SERDES L — R25 62Ω
LD DBAR L — R26 75Ω
LD UCR L
LD UBDATA L
LD USADDR L
LD UBAR L — R24 62Ω

BUS DEST 2 L

CLOCKING

THIS DRAWING IS THE PROPERTY OF DIGITAL EQUIPMENT CORPORATION AND SHALL NOT BE REPRODUCED OR COPIED OR USED IN WHOLE OR IN PART AS THE BASIS FOR THE MANUFACTURE OR SALE OF ITEMS WITHOUT WRITTEN PERMISSION. COPYRIGHT © 1981, DIGITAL EQUIPMENT CORPORATION.

REVISIONS		
CHK	CHANGE NO.	REV

digital

DRN. — DATE 17-MAR-81 — ENG. — DATE
CHK'D. — DATE — BOARD LOCATION: SHEET 2 OF 12
SUDS:<BOWEN>UDAIC2.DRW [11-MAR-81 18:29] — NEXT HIGHER ASSEMBLY:
FIRST USED ON OPTION/MODEL: UDA

TITLE: UDA #1 NO ROMS

SIZE	CODE	NUMBER	REV.
D	CS	M7161-0-UDA2	B

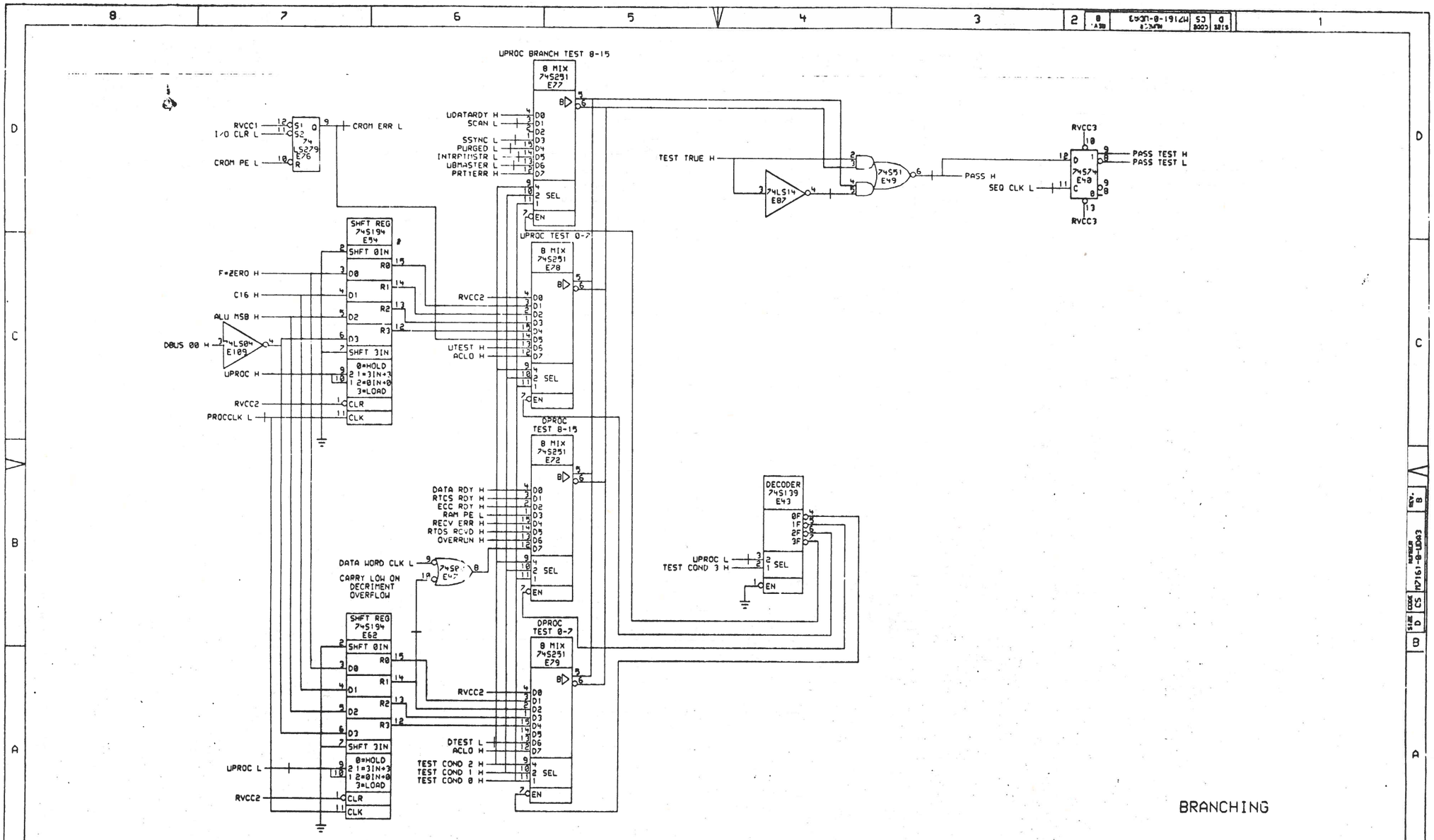

THIS DRAWING AND SPECIFICATIONS, (OR THEIR), ARE THE PROPERTY OF DIGITAL EQUIPMENT CORPORATION AND SHALL NOT BE REPRODUCED OR COPIED OR USED IN WHOLE OR IN PART AS THE BASIS FOR THE MANUFACTURE OR SALE OF ITEMS WITHOUT WRITTEN PERMISSION. COPYRIGHT © 1981, DIGITAL EQUIPMENT CORPORATION.

REVISIONS		
CHK	CHANGE NO.	REV

digital

DRN. | DATE 17-MAR-81 | ENG. | DATE
CHK'D. | DATE | BOARD LOCATIONS: SHEET 3 OF 12
SHEETSCHEMENXUDA1C3.DRW 11-MAR-81 18:09 | NEXT HIGHER ASSEMBLY:
FIRST USED ON OPTION/MODEL: UDA

TITLE: UDA #1 NO ROMS

SIZE	CODE	NUMBER	REV.
D	CS	M7161-0-UDA3	B

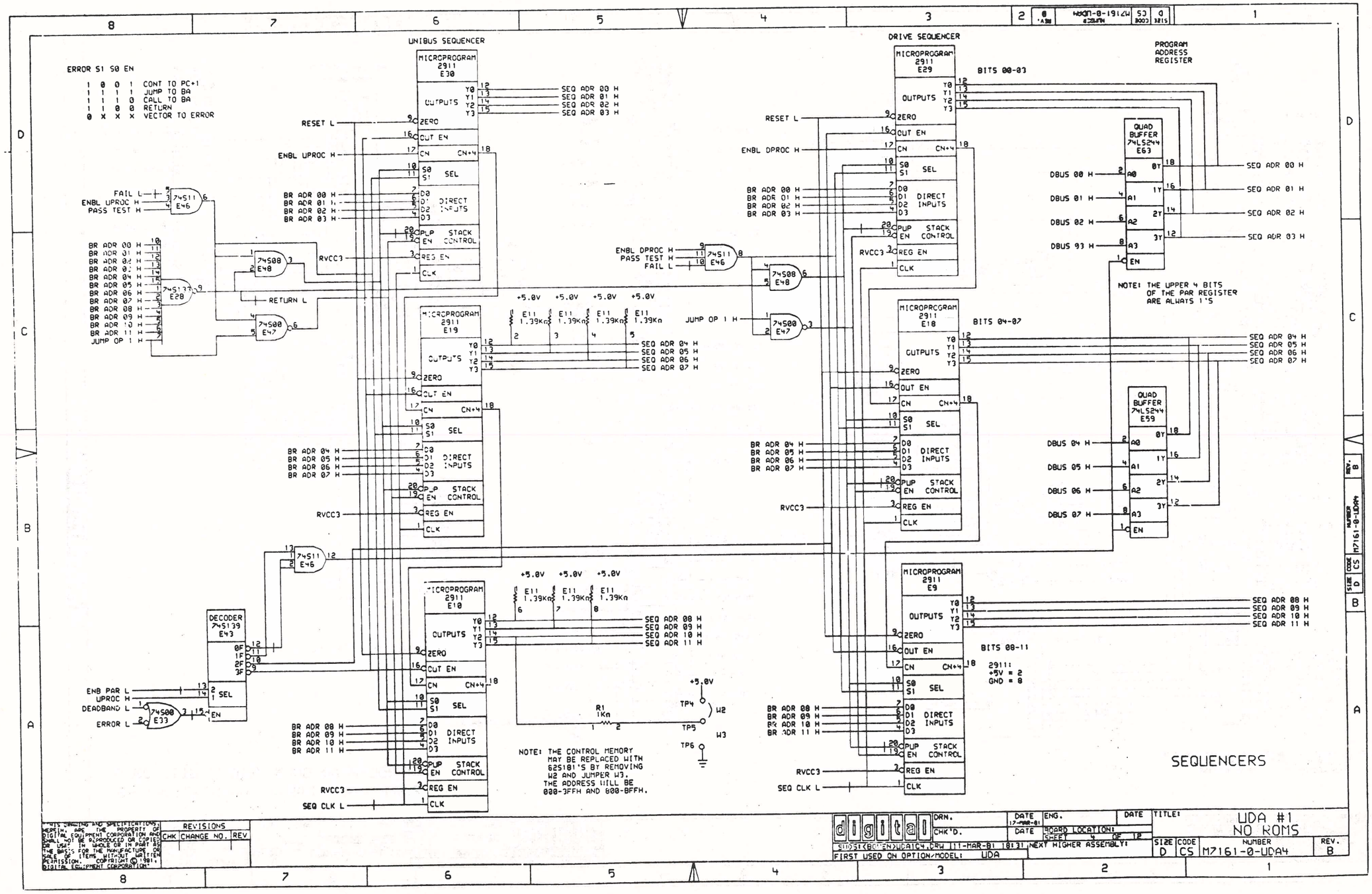

THIS DRAWING AND SPECIFICATIONS, HEREIN, ARE THE PROPERTY OF DIGITAL EQUIPMENT CORPORATION AND SHALL NOT BE REPRODUCED OR COPIED OR USED IN WHOLE OR IN PART AS THE BASIS FOR THE MANUFACTURE OR SALE OF ITEMS WITHOUT WRITTEN PERMISSION. COPYRIGHT © 1981, DIGITAL EQUIPMENT CORPORATION

REVISIONS		
CHK	CHANGE NO.	REV

DRN.	DATE 17-MAR-81	ENG.	DATE
CHK'D.	DATE	BOARD LOCATION: SHEET 4 OF 12	
NEXT HIGHER ASSEMBLY:			

SYS$SCR(BOWEN)UDA1C4.DRW 11-MAR-81 18:31

FIRST USED ON OPTION/MODEL: UDA

TITLE: UDA #1 NO ROMS

SIZE	CODE	NUMBER	REV.
D	CS	M7161-0-UDA4	B

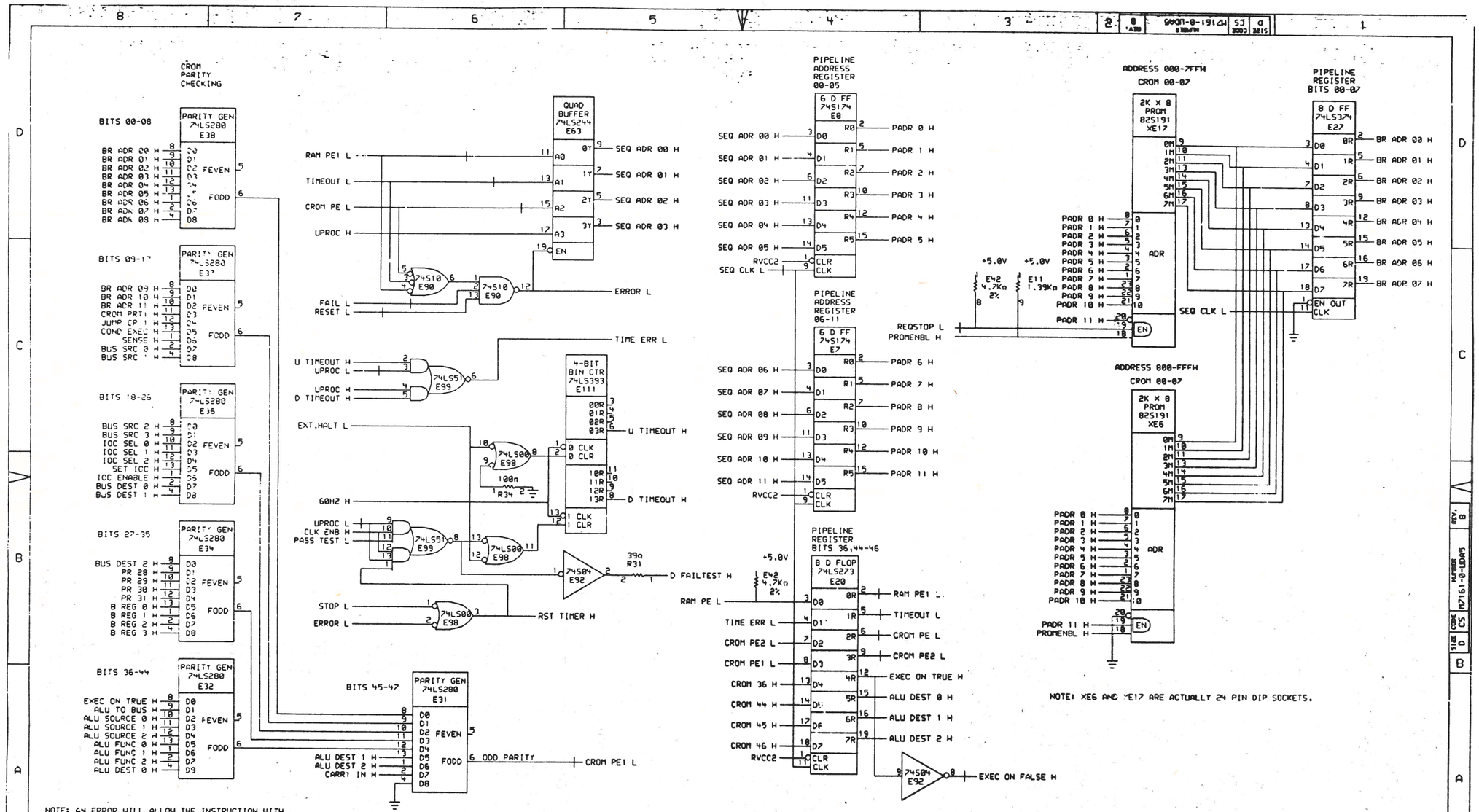

NOTE: AN ERROR WILL ALLOW THE INSTRUCTION WITH THE ERROR TO COMPLETE, THE NEXT ONE, THEN VECTOR TO THE ERROR ROUTINE.

CONTROL READ ONLY MEMORY BITS 00,07
PARITY AND PAR,PR 00-07,35,44-46

"THIS DRAWING AND SPECIFICATIONS, HEREIN, ARE THE PROPERTY OF DIGITAL EQUIPMENT CORPORATION AND SHALL NOT BE REPRODUCED OR COPIED OR USED IN WHOLE OR IN PART AS THE BASIS FOR THE MANUFACTURE OR SALE OF ITEMS WITHOUT WRITTEN PERMISSION. COPYRIGHT © 1981, DIGITAL EQUIPMENT CORPORATION"

REVISIONS		
CHK	CHANGE NO.	REV

digital

DRN. | DATE 17-MAR-81 | ENG. | DATE
CHK'D. | DATE | BOARD LOCATION: SHEET 5 OF 12

SUDS1:<BOWEN>UDA1C5.DRW 11-MAR-81 18:33 | NEXT HIGHER ASSEMBLY:
FIRST USED ON OPTION/MODEL: UDA

TITLE: UDA #1 NO ROMS

SIZE	CODE	NUMBER	REV.
D	CS	M7161-0-UDA5	B

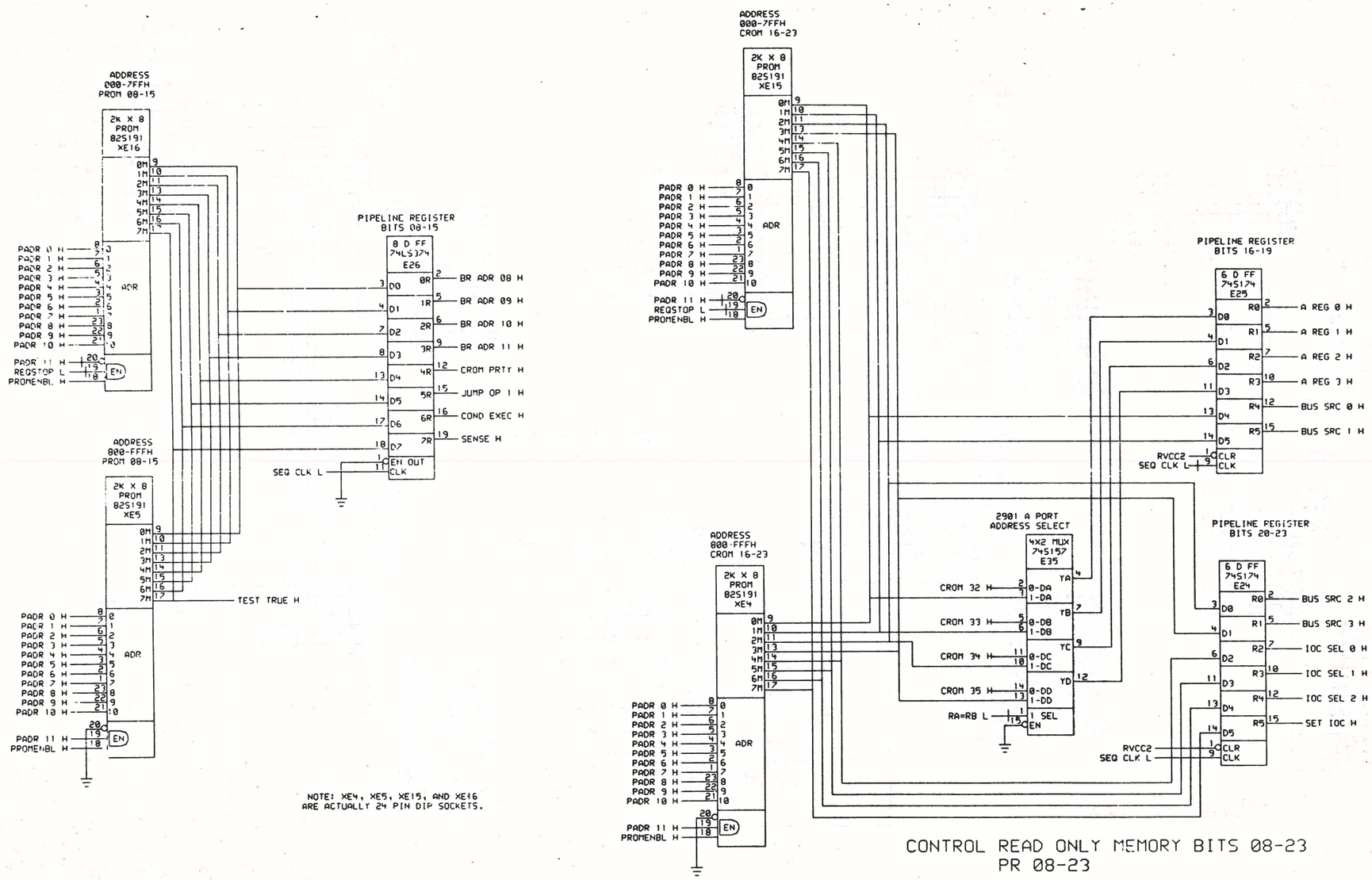

NOTE: XE4, XE5, XE15, AND XE16
ARE ACTUALLY 24 PIN DIP SOCKETS.

CONTROL READ ONLY MEMORY BITS 08-23
PR 08-23

"THIS DRAWING AND SPECIFICATIONS, HEREIN, ARE THE PROPERTY OF DIGITAL EQUIPMENT CORPORATION AND SHALL NOT BE REPRODUCED OR COPIED OR USED IN WHOLE OR IN PART AS THE BASIS FOR THE MANUFACTURE OR SALE OF ITEMS WITHOUT WRITTEN PERMISSION. COPYRIGHT © 1981, DIGITAL EQUIPMENT CORPORATION"

REVISIONS		
CHK	CHANGE NO.	REV

digital

DRN. | DATE 17-MAR-81 | ENG. | DATE
CHK'D. | DATE | BOARD LOCATION: SHEET 6 OF 12

SUDS:<BOWEN>UDA1C6.DRW 11-MAR-81 18:36 | NEXT HIGHER ASSEMBLY:
FIRST USED ON OPTION/MODEL: UDA

TITLE: UDA #1 NO ROMS

SIZE	CODE	NUMBER	REV.
D	CS	M7161-0-UDA6	B

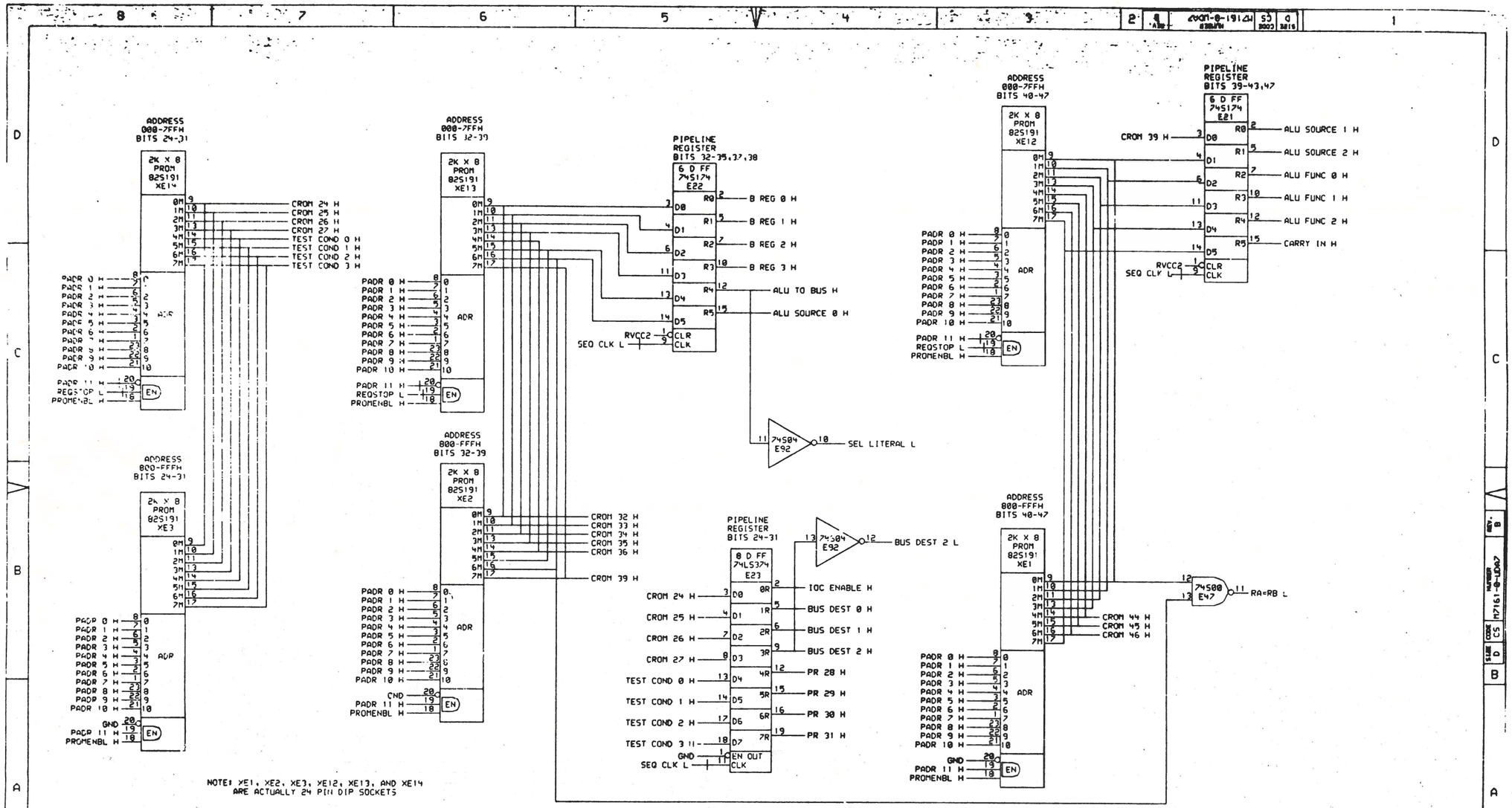

NOTE: XE1, XE2, XE3, XE12, XE13, AND XE14 ARE ACTUALLY 24 PIN DIP SOCKETS

CONTROL READ ONLY MEMORY BITS 24-47
PR 32-35,37-43,47

"THIS DRAWING AND SPECIFICATIONS, WHEN, ARE THE PROPERTY OF DIGITAL EQUIPMENT CORPORATION AND SHALL NOT BE REPRODUCED OR COPIED OR USED IN WHOLE OR IN PART AS THE BASIS FOR THE MANUFACTURE OR SALE OF ITEMS WITHOUT WRITTEN PERMISSION. COPYRIGHT © 1981, DIGITAL EQUIPMENT CORPORATION"

REVISIONS	
CHK CHANGE NO.	REV

digital

DRN. | DATE 17-MAR-81 | ENG. | DATE
CHK D. | DATE | BOARD LOCATION: SHEET 7 OF 12

SUDS:(BOWEN)UDA1C7.DRW 11-MAR-81 18:39 | NEXT HIGHER ASSEMBLY:
FIRST USED ON OPTION/MODEL: UDA

TITLE: UDA #1 NO ROMS

SIZE	CODE	NUMBER	REV.
D	CS	M7161-0-UDA7	B

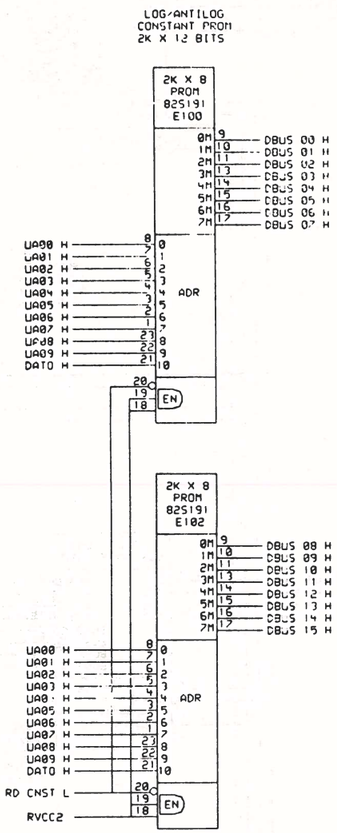

NOTE: BITS 12-15 OF THE PROM MUST BE ZERO FOR SOFTWARE EFFICIENCY.

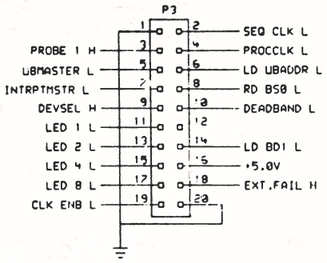

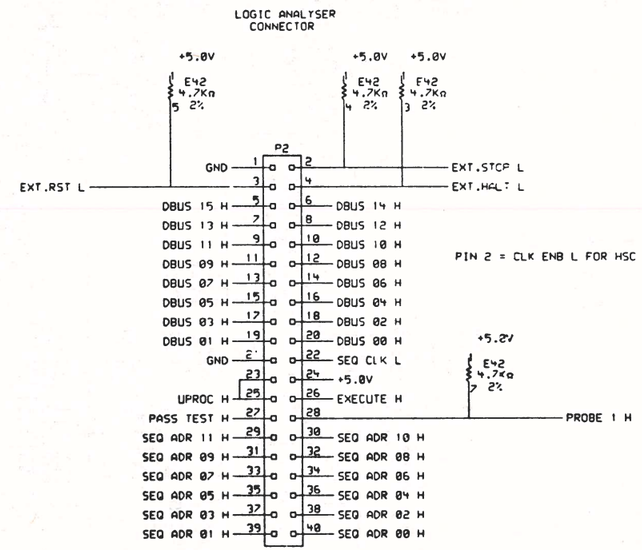

LOG/ALG PROM AND CONNECTORS

"THIS DRAWING AND SPECIFICATIONS, HEREIN, ARE THE PROPERTY OF DIGITAL EQUIPMENT CORPORATION AND SHALL NOT BE REPRODUCED OR COPIED OR USED IN WHOLE OR IN PART AS THE BASIS FOR THE MANUFACTURE OR SALE OF ITEMS WITHOUT WRITTEN PERMISSION. COPYRIGHT © 1981, DIGITAL EQUIPMENT CORPORATION"

REVISIONS		
CHK	CHANGE NO.	REV

digital

DRN. | DATE 17-MAR-81 | ENG. | DATE | TITLE: UDA #1 NO ROMS

CHK'D. | DATE | BOARD LOCATION: | SHEET 8 OF 12

SUDS1:[BOWEN]UDA1C8.DRW [11-MAR-81 18:44] | NEXT HIGHER ASSEMBLY:

FIRST USED ON OPTION/MODEL: UDA

SIZE	CODE	NUMBER	REV.
D	CS	M7161-0-UDA8	B

NOTE: UNIBUS INTERFACE 5-14 PIN, 12-16 PIN, 10-30PIN.

UNIBUS CONSTANT ADDRESS REGISTER

8 D FF 74LS374 E114

DBUS 00 H → D0 → 0R → UA00 H
DBUS 09 H → D1 → 1R → UA09 H
DBUS 10 H → D2 → 2R → UA10 H
DBUS 11 H → D3 → 3R → UA11 H
DBUS 12 H → D4 → 4R → UA12 H
DBUS 13 H → D5 → 5R → UA13 H
DBUS 14 H → D6 → 6R → UA14 H
DBUS 15 H → D7 → 7R → UA15 H
GND → EN OUT CLK

UP/DOWN COUNTER 74LS191 E122

DBUS 08 H → D0 → R8 → UA08 H
DBUS 07 H → D1 → R4 → UA07 H
DBUS 06 H → D2 → R2 → UA06 H
DBUS 05 H → D3 → R1 → UA05 H
MAX/MIN, RIP, CLK, UP/DRN, EN, LOAD
GND

UP/DOWN COUNTER 74LS191 E112

DBUS 04 H → D0 → R8 → UA04 H
DBUS 03 H → D1 → R4 → UA03 H
DBUS 02 H → D2 → R2 → UA02 H
DBUS 01 H → D3 → R1 → UA01 H
INCRIMENT WORD
ADVADDR H
GND
LD UBADDR L
MAX/MIN, RIP, CLK, UP/DRN, EN, LOAD

AUTO-INCREMENT FOR 256 WORDS MAX.

+5.0V
R10 1Kn

TP1 A02 H
TP2
TP3 A02 L
W4
W5
8881 E84 — RVCC1

UNIBUS ADDRESS DRIVER COMPARATOR

DEVSEL H

4 BIT TRANSCEIVER DC005 E95
IN/OUT D3 D2 D1 D0 — UA14 H, UA13 H, UA12 H, UA15 H
MATCH H
BUS A14 L, BUS A13 L, BUS A12 L, BUS A15 L — EK1, EK2, EC1, ED2
BU3 BU2 BU1 BU0 MENB
JA3 JA2 JA1
JV3 JV2 JV1
XMIT REC
E96
GND

4 BIT TRANSCEIVER DC005 E106
IN/OUT D3 D2 D1 D0 — UA08 H, UA07 H, UA06 H, UA16 H
MATCH H
BUS A08 L, BUS A07 L, BUS A06 L, BUS A16 L — EN2, EP2, EL1, EE2
BU3 BU2 BU1 BU0 MENB
JA3 JA2 JA1
JV3 JV2 JV1
XMIT REC
E96
GND

4 BIT TRANSCEIVER DC005 E94
IN/OUT D3 D2 D1 D0 — UA11 H, UA10 H, UA09 H, UA17 H
MATCH H
BUS A11 L, BUS A10 L, BUS A09 L, BUS A17 L — EL1, EP1, ER1, ED1
BU3 BU2 BU1 BU0 MENB
JA3 JA2 JA1
JV3 JV2 JV1
XMIT REC
E96
GND
MSTR H

4 BIT TRANSCEIVER DC005 E107
IN/OUT D3 D2 D1 D0 — UA05 H, UA04 H, UA03 H, TMSYN H
MATCH H
BUS A05 L, BUS A04 L, BUS A03 L, BUS MSYN L — EV1, EU2, EV2, EE1
BU3 BU2 BU1 BU0 MENB
JA3 JA2 JA1
JV3 JV2 JV1
XMIT REC
E96
GND

UNIBUS ADDRESS SELECTOR SWITCH
W4=76X XX0,2Q
W5=76X XX4,6Q
RANGE:
766 000Q-
777 776Q

UNIBUS DATA REGISTER

UDASA

2908 E51 BUS TRANCEIVER

DBUS 00 H → TX0, DBUS 01 H → TX1, DBUS 02 H → TX2, DBUS 03 H → TX3
RX0 → DBUS 00 H, RX1 → DBUS 01 H, RX2 → DBUS 02 H, RX3 → DBUS 03 H
BUS0 → CS2 → BUS D00 L
BUS1 → CR2 → BUS D01 L
BUS2 → CU2 → BUS D02 L
BUS3 → CT2 → BUS D03 L
TXCLK, BUS ENO, PAR
RX/LCH/EN, RXEN

2908 E60 BUS TRANCEIVER

DBUS 04 H → TX0, DBUS 05 H → TX1, DBUS 06 H → TX2, DBUS 07 H → TX3
RX0 → DBUS 04 H, RX1 → DBUS 05 H, RX2 → DBUS 06 H, RX3 → DBUS 07 H
BUS0 → CN2 → BUS D04 L
BUS1 → CP2 → BUS D05 L
BUS2 → CV2 → BUS D06 L
BUS3 → CM2 → BUS D07 L
TXCLK, BUS ENO, PAR
RX/LCH/EN, RXEN

2908 E53 BUS TRANCEIVER

DBUS 08 H → TX0, DBUS 09 H → TX1, DBUS 10 H → TX2, DBUS 11 H → TX3
RX0 → DBUS 08 H, RX1 → DBUS 09 H, RX2 → DBUS 10 H, RX3 → DBUS 11 H
BUS0 → CL2 → BUS D08 L
BUS1 → CK2 → BUS D09 L
BUS2 → CJ2 → BUS D10 L
BUS3 → CH1 → BUS D11 L
TXCLK, BUS ENO, PAR
RX/LCH/EN, RXEN

2908
+5V = PIN 20
GND = PINS 5,15
TXCLK IS AN EDGE TRIGGERED LATCH
RX/LCH/EN IS AN ENABLE FOR A TRANSPARENT LATCH

2908 E52 BUS TRANCEIVER

DBUS 12 H → TX0, DBUS 13 H → TX1, DBUS 14 H → TX2, DBUS 15 H → TX3
RX0 → DBUS 12 H, RX1 → DBUS 13 H, RX2 → DBUS 14 H, RX3 → DBUS 15 H
BUS0 → CH2 → BUS D12 L
BUS1 → CF2 → BUS D13 L
BUS2 → CE2 → BUS D14 L
BUS3 → CD2 → BUS D15 L
TXCLK, BUS ENO, PAR
RX/LCH/EN, RXEN

LD UBDATA L
BUS ENB L
BUS LTCH L
RD UBDATA L

UNIBUS DATA AND ADDRESS

"THIS DRAWING AND SPECIFICATIONS, HEREIN, ARE THE PROPERTY OF DIGITAL EQUIPMENT CORPORATION AND SHALL NOT BE REPRODUCED OR COPIED OR USED IN WHOLE OR IN PART AS THE BASIS FOR THE MANUFACTURE OR SALE OF ITEMS WITHOUT WRITTEN PERMISSION. COPYRIGHT © 1981, DIGITAL EQUIPMENT CORPORATION"

REVISIONS		
CHK	CHANGE NO.	REV

digital

DRN. | DATE 17-MAR-81 | ENG. | DATE
CHK'D. | DATE | BOARD LOCATION: | SHEET 9 OF 12
SUDS:<BOWEN>UDA1C9.DRW 10-MAR-81 19:24 NEXT HIGHER ASSEMBLY:
FIRST USED ON OPTION/MODEL:

TITLE: UDA #1 NO RUMS

SIZE	CODE	NUMBER	REV.
D	CS	M7161-0-UDA9	AX01

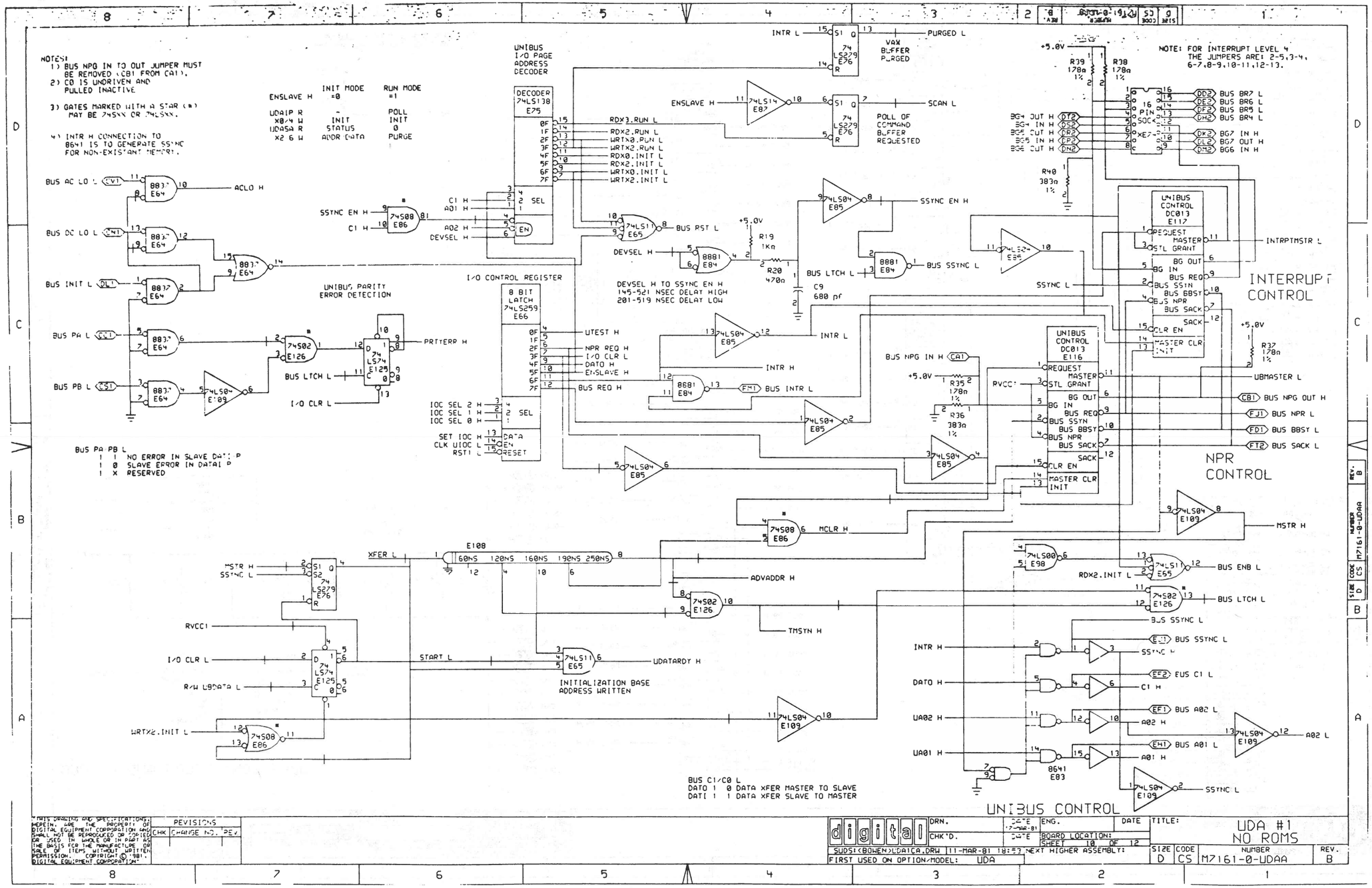
NOTES:
1) BUS NPG IN TO OUT JUMPER MUST BE REMOVED (CB1 FROM CA1).
2) C0 IS UNDRIVEN AND PULLED INACTIVE
3) GATES MARKED WITH A STAR (*) MAY BE 74SXX OR 74LSXX.
4) INTR H CONNECTION TO 8641 IS TO GENERATE SSYNC FOR NON-EXISTANT MEMORY.
ENSLAVE H
INIT MODE =0
RUN MODE =1
UDAIP R
X0/4 W
UDASA R
X2 6 W
INIT
STATUS
ADDR DATA
POLL
INIT
0
PURGE
UNIBUS I/O PAGE ADDRESS DECODER
DECODER 74LS138 E75
VAX BUFFER PURGED
POLL OF COMMAND BUFFER REQUESTED
NOTE: FOR INTERRUPT LEVEL 4 THE JUMPERS ARE: 2-5,3-4, 6-7,8-9,10-11,12-13.
BUS AC LO L
BUS DC LO L
BUS INIT L
BUS PA L
BUS PB L
ACLO H
SSYNC EN H
UNIBUS PARITY ERROR DETECTION
PRITERR H
I/O CONTROL REGISTER
8 BIT LATCH 74LS259 E66
DEVSEL H TO SSYNC EN H
145-521 NSEC DELAY HIGH
201-519 NSEC DELAY LOW
BUS RST L
BUS LTCH L
BUS SSYNC L
SSYNC L
INTR L
INTR H
BUS INTR L
BUS NPG IN H
UNIBUS CONTROL DC013 E116
UNIBUS CONTROL DC013 E117
INTERRUPT CONTROL
NPR CONTROL
UNIBUS CONTROL
INTRPTMSTR L
UBMASTER L
BUS NPG OUT H
BUS NPR L
BUS BBSY L
BUS SACK L
MSTR H
MCLR H
ADVADDR H
TMSYN H
UDATARDY H
INITIALIZATION BASE ADDRESS WRITTEN
BUS ENB L
BUS LTCH L
BUS SSYNC L
EUS C1 L
BUS A02 L
BUS A01 L
A02 L
A01 L
SSYNC L
BUS C1/C0 L
DATO 1 0 DATA XFER MASTER TO SLAVE
DATI 1 1 DATA XFER SLAVE TO MASTER
BUS PA PB L
1 1 NO ERROR IN SLAVE DATI P
1 0 SLAVE ERROR IN DATAI P
1 X RESERVED
digital
UDA #1
NO ROMS
M7161-0-UDAA
D
CS
B
FIRST USED ON OPTION/MODEL: UDA

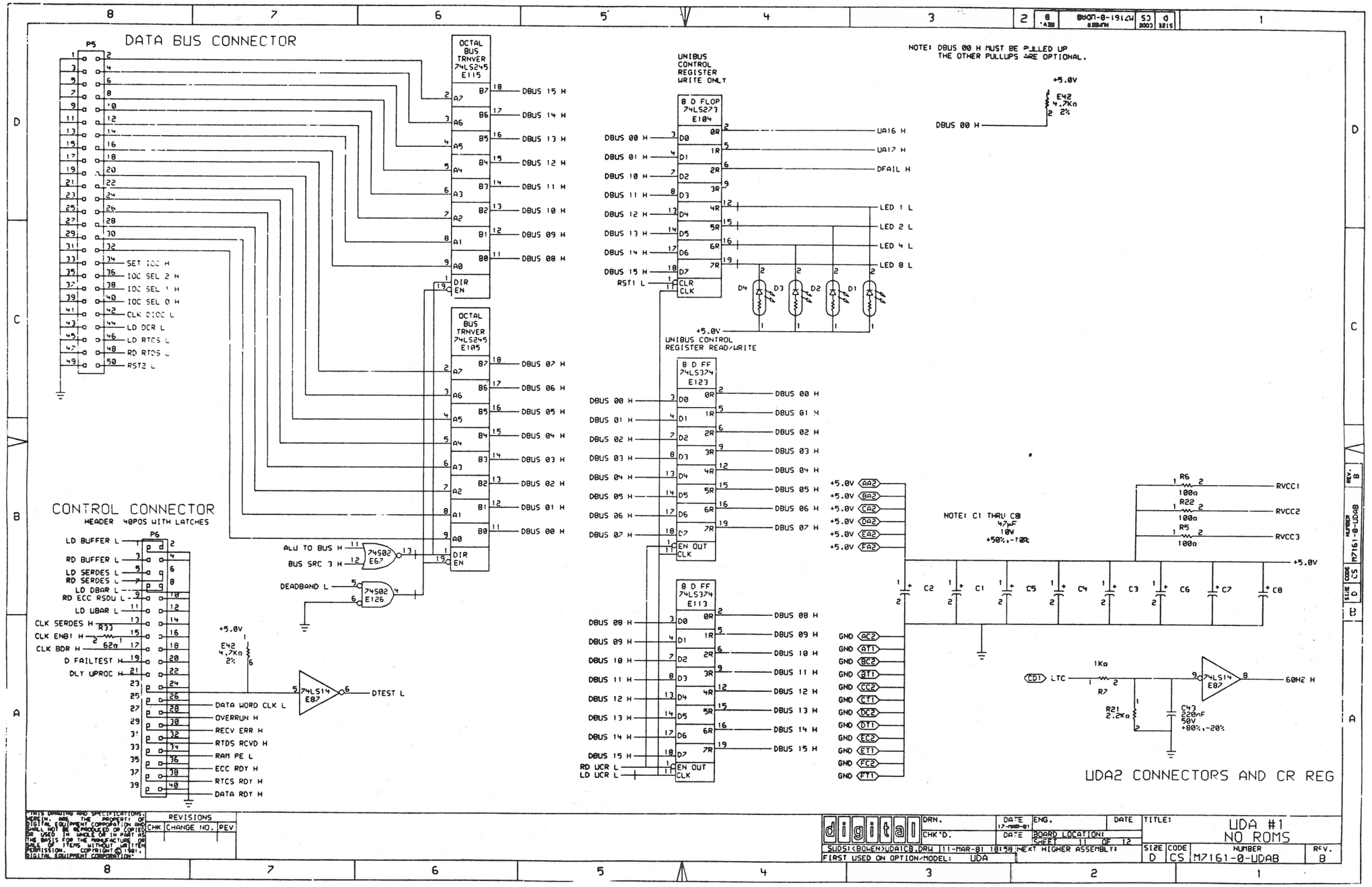

THIS DRAWING AND SPECIFICATIONS, HEREIN, ARE THE PROPERTY OF DIGITAL EQUIPMENT CORPORATION AND SHALL NOT BE REPRODUCED OR COPIED OR USED IN WHOLE OR IN PART AS THE BASIS FOR THE MANUFACTURE OR SALE OF ITEMS WITHOUT WRITTEN PERMISSION. COPYRIGHT © 1981, DIGITAL EQUIPMENT CORPORATION.

REVISIONS		
CHK	CHANGE NO.	REV

DRN.	DATE 17-MAR-81	ENG.	DATE	TITLE: UDA #1 NO ROMS
CHK'D.	DATE	BOARD LOCATION: SHEET 11 OF 12		
SUDS1<BOLEN>UDA1CB.DRW 11-MAR-81 18:58		NEXT HIGHER ASSEMBLY:		SIZE D · CODE CS · NUMBER M7161-0-UDAB · REV. B
FIRST USED ON OPTION/MODEL: UDA				

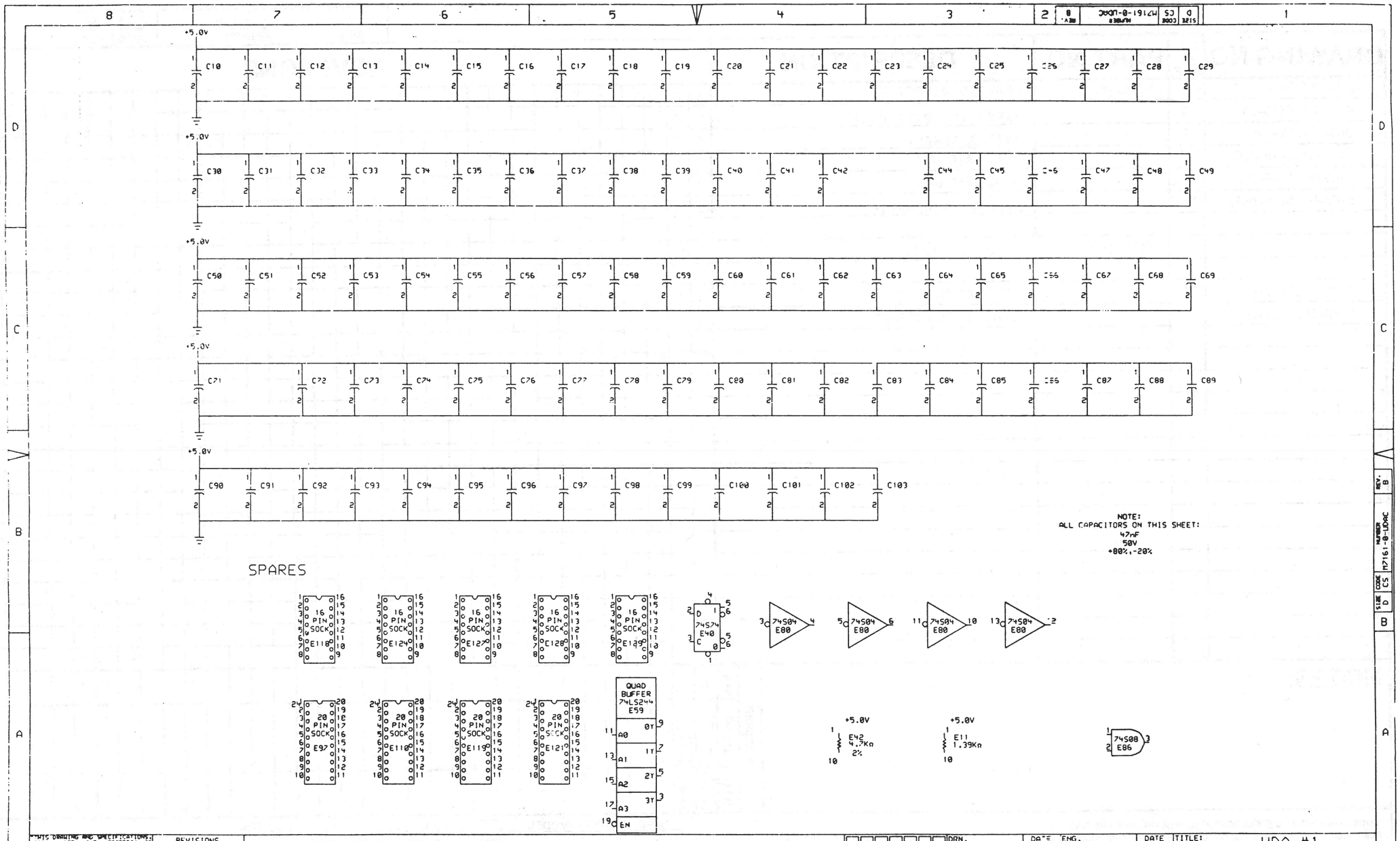

NOTE:
ALL CAPACITORS ON THIS SHEET:
47nF
50V
+80%,-20%

"THIS DRAWING AND SPECIFICATIONS, HEREIN, ARE THE PROPERTY OF DIGITAL EQUIPMENT CORPORATION AND SHALL NOT BE REPRODUCED OR COPIED OR USED IN WHOLE OR IN PART AS THE BASIS FOR THE MANUFACTURE OR SALE OF ITEMS WITHOUT WRITTEN PERMISSION. COPYRIGHT © 1981, DIGITAL EQUIPMENT CORPORATION"

REVISIONS		
CHK	CHANGE NO.	REV

DRN.	DATE ENG. 17-MAR-81	DATE	TITLE: UDA #1 NO ROMS
CHK'D.	DATE BOARD LOCATION: SHEET 12 OF 12		
SUDS:<BOWEN>UDA1CC.DRW 11-MAR-81 18:59 NEXT HIGHER ASSEMBLY:			SIZE D · CODE CS · NUMBER M7161-0-UDAC · REV. B
FIRST USED ON OPTION/MODEL: UDA			

SIZE	CODE	NUMBER	REV.
B	DD	M7162-0	C

DRAWING NO.	NO. OF SHTS.	PART NO.	DESCRIPTION	REVISIONS	
B-DD-M7162-0	-	M7162-00	DRAWING DIRECTORY	B	C
K-PL-M7162-0-DBP	3		PARTSLIST DATA BASE	B	C
D-UA-M7162-0-0	2		UNIT ASSEMBLY	B	C
K-PC-M7162-0-DBC	-		P.C. DATA BASE	B	C
K-CS-M7162-0-DBS	-		SUDS DATA BASE	B	C
K-CS-M7162-0-UDA2	13		CIRCUIT SCHEMATIC	B	C
		5014921-00	P.C. ETCH BOARD	B	C
E-EC-5014921-0-0	3		ETCH CUT DRAWING	B	C
D-MD-5014921-0-0	6		DRILL & ETCH DRAWING	B	C

NOTES:

REVISIONS		
REV.	B	C
CHG NO.	INIT	M7162-C001A
DATE	RPM 5 Sep 81	NC 27 APR 82

"THIS DRAWING AND SPECIFICATIONS, HEREIN, ARE THE PROPERTY OF DIGITAL EQUIPMENT CORPORATION AND SHALL NOT BE REPRODUCED OR COPIED OR USED IN WHOLE OR IN PART AS THE BASIS FOR THE MANUFACTURE OR SALE OF ITEMS WITHOUT WRITTEN PERMISSION.

COPYRIGHT© 1981 DIGITAL EQUIPMENT CORPORATION

digital

USED ON OPTION/MODEL
PA80

DRN.	S. Lehman	4-14-82
CHK'D	M Landy	20 APR 82
ENG.	[illegible]	9-3-82
PROD	D. SWIFT (RPM)	7 SEP 82

TITLE			
UDA # 2			
SIZE	CODE	NUMBER	REV.
B	DD	M7162-0	C
SHEET 1 OF 1			

DRB 126

THIS DRAWING AND SPECIFICATIONS, HEREIN, ARE THE PROPERTY OF DIGITAL EQUIPMENT CORPORATION AND SHALL NOT BE REPRODUCED OR COPIED OR USED IN WHOLE OR IN PART AS THE BASIS FOR THE MANUFACTURE OR SALE OF ITEMS WITHOUT WRITTEN PERMISSION.
COPYRIGHT © 1982 DIGITAL EQUIPMENT CORPORATION

COMPONENT SIDE VIEW

DETAIL A
4 PLACES

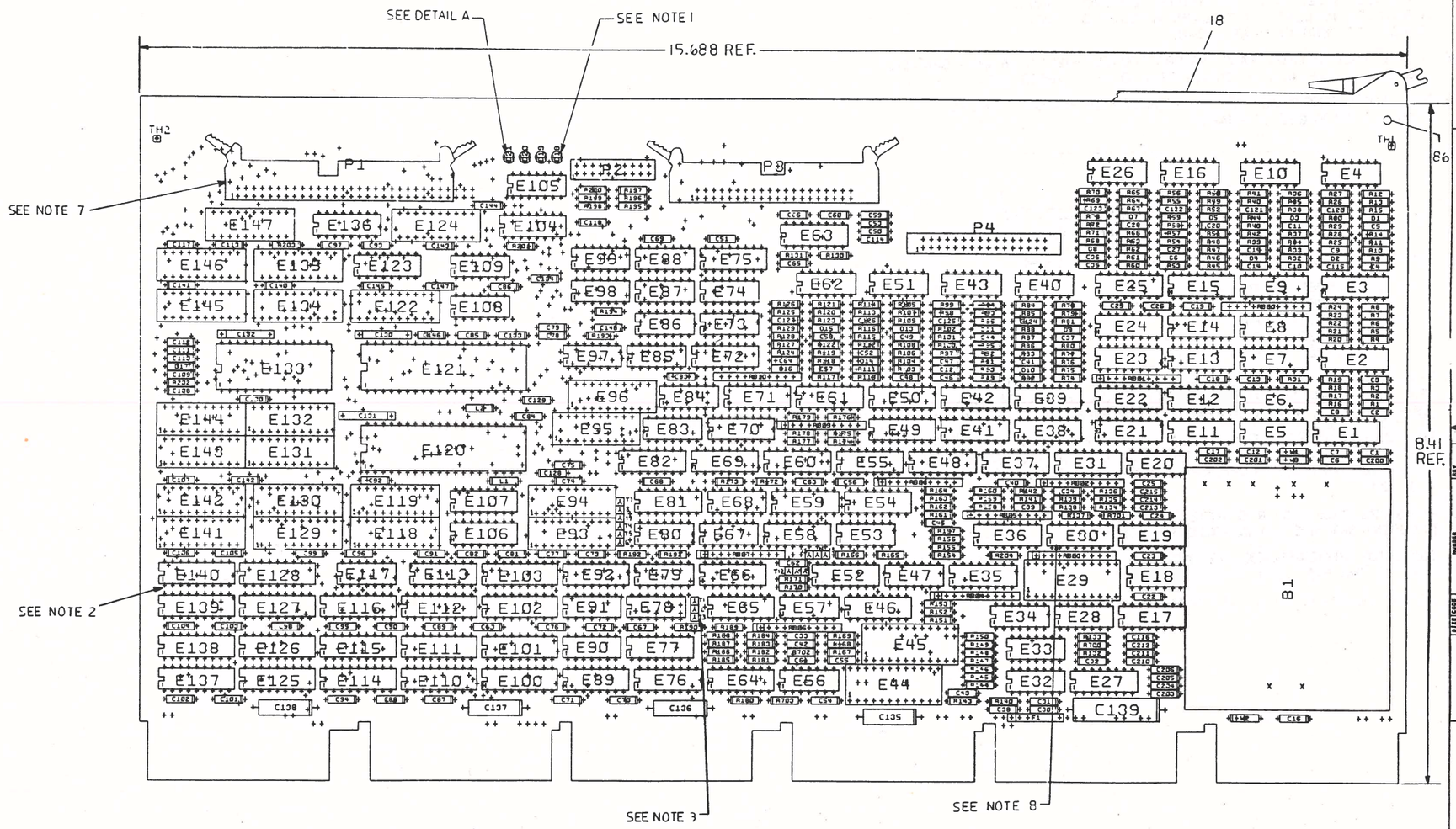

NOTES: FOR NOTES SEE SHEET 2.

STEP E	↑ Y AXIS NA	STEP ___ TIMES
REPEAT	→ X AXIS NA	STEP ___ TIMES

CHK	CHANGE NO	REV
1376	M7162-CK001 SL 5-4-82 J. PULSIFER	C

ETCH REV. C - P2

SIGNATURES	DATE
DRN.	5-4-82
CHK'D.	5-4-82
MECH.ENG.	5-3-82
PROJ.ENG.	5-3-82
PROD.	7 SEP 82

digital

TITLE U.D.A. # 2

SCALE 1.5/1 | SIZE D | CODE UA | NUMBER M7162-0-0 | REV C

SHT. 1 OF 2

NEXT HIGHER ASSY. B-DD-M7162-0

MS#2900296

"THIS DRAWING AND SPECIFICATIONS, HEREIN, ARE THE PROPERTY OF DIGITAL EQUIPMENT CORPORATION AND SHALL NOT BE REPRODUCED OR COPIED OR USED IN WHOLE OR IN PART AS THE BASIS FOR THE MANUFACTURE OR SALE OF ITEMS WITHOUT WRITTEN PERMISSION.
COPYRIGHT © 1981 DIGITAL EQUIPMENT CORPORATION"

NOTES:

1. D18, D19, D20 & D21 TO BE MOUNTED ON COMPONENT SIDE, LONGER LEG TO LEFT. LEAVE LEADS APPROX. .18" LONG IN ORDER TO BEND OVER AS SHOWN.

2. PLEASE FOLLOW CMOS HANDLING PROCEDURES WHEN INSTALLING E100-E103, E110-E112, E114-E116, E125-E128, E137-E140. = VERY IMPORTANT=

3. PINS T1-T15 (1210385-01) MUST BE INSTALLED ON BOARD WITH SIDES PARALLEL TO EDGES OF BOARD.

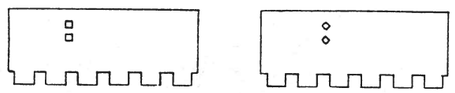

JUMPERS W4-W8 (1214314-00) ARE INSTALLED AS FOLLOWS:

JUMPER W4-PINS T1 & T2
JUMPER W5-PINS T4 & T5
JUMPER W6-PINS T7 & T8
JUMPER W7-PINS T11 & T12
JUMPER W8-PINS T13 & T14

4. THE FOLLOWING ARE SPARES ON THE BOARD. THEY CAN BE USED FOR ADDING COMPONENTS TO THE CIRCUIT: E27, E24, E1, E5, E11, E17, E18, E19, E20, E21, E6, E12, E22, E63, E89, E124, E146, C50, C53, C59, C114, C200-C206, C210-C215.
C21-NOT USED

5. THE FOLLOWING ARE EXTRA ECL DATA BUS TERMINATION RESISTORS WHICH CAN BE USED TO "TWEAK" THE ECL LINES IF NECESSARY: R172, R177, R178, R179, R142, R158, R159, R164, R163, R162, R160, R161, R22, R5, R23, R24.

6. RESISTORS R204, R700, R701, R702, R703 APPEAR ON SHEET 1 OF THIS DOCUMENT, BUT ARE NOT IN SEQUENTIAL ORDER.

7. CONNECTOR P1 (1216832-03) TO BE MOUNTED ON COMPONENT SIDE WITH PIN 1 TO THE FAR LEFT.

8. MOUNT ITEM 83 (E30, E37, E48, E52, E54, E64) FLUSH WITH BOARD.

REVISION HISTORY		
DATE	ECO NUMBER	REV.

TITLE U.D.A. NO. 2

DOCUMENT NUMBER			
SIZE	CODE	NUMBER	REV.
D	UA	M7162-0-0	C
SCALE		SHEET 2 OF 2	

DRD 138A

AUTOMATED BY PRTLST.3P(44) P A R T S L I S T SHEET A1 OF A3

LINE	ITEM	DOCUMENT NUMBER	PART NUMBER	DESCRIPTION	QTY PER VARIATION 00	REFERENCE DESIGNATOR
1	1	D-MD-5014921-0-0	5014921-00	DRILL AND ETCH BRD.	1	
2	2		1212385-00	*** THIS ITEM IS NOT USED ***	-	
3	3		1012784-00	.047 MFD 50V +80-20% CER	124	C1-C5,C7-C15,C17-C20,C22-C49,
						CONT C51,C52,C54-C58,C60-C113,
						CONT C115-C118,C128,C129,C133,C134,
						CONT C140-C148
4	4		1013466-09	1000.0 MMF 50V 10% X7R CER	2	C6,C16
5	5		1013466-11	.22 MFD 50V +80-20% Z5U CER	3	C130,C131,C132
6	6		1015878-00	.01 MFD 50V +80-20% CER	8	C120-C127
7	7		1016549-00	47 MFD 10V +50-10% AL EL	4	C135-C138
8	8		1104860-00	1N 746A VZ= 3.3 5%	8	D6,D2,D14,D10,D8,D4,D16,D12
9	9		1105275-00	D 672 TR= 15NS PIV= 60V SI	8	D5,D1,D13,D9,D7,D3,D15,D11
10	10		1110836-00	1N 759A VZ= 12.0 5% .40W	1	D17
11	11		1112689-00	LED .8MCD@16MA VF=5V	4	D18-D21
12	12		1205747-00	FUSE, SUB-MINI, 5.000A, 125V, A	1	F1
13	13		1210385-01	PIN 1POS WIRE WRAP	15	T1-T15
14	14		1212965-04	PCB,HEADER 20PIN(2X05).100CC 90D	1	P2
15	15		1214314-00	CONN,P+S 02SKT(1X02).100CC JUM	5	W4-W8
16	16		1216832-02	PCB,HEADER 40POS(2X20).100CC 90D	1	P3
17	17		1216832-03	PCB,HEADER 50POS(2X25).100CC 90D	1	P1
18	18		1216988-02	HANDLE,MODULE,HEX TWO EJECTORS	1	
19	19		1218348-00	PCB,HEADER 32PIN(2X16).100CC 90D	1	P4
20	20		1300202-00	47.0 .25 W 5.0 % CC	16	R16,R43,R29,R32,R45,R58,R61,R72,
						CONT R82,R87,R89,R101,R103,R111,R110,
						CONT R128
21	21		1300247-00	120.0 .25 W 5.0 % CC	16	R156,R141,R135,R187,R183,R185,
						CONT R153,R150,R182,R192,R155,R170,
						CONT R700,R701,R702,R703
22	22		1300271-00	220.0 .25 W 5.0 % CC	8	R52,R15,R109,R81,R67,R38,R123,
						CONT R96

REVISION HISTORY			BASIC PART NO: M7162			
ENG	ECO NUMBER	REV	SECTION A OF A	DRN: S. BOURBEAU	DATE: 20-JAN-81	D I G I T A L
	INITIAL	B	SECTION.VARIATION INDEX	CHK'D: R. MICHAUD	DATE: 20-JAN-81	TITLE PARTS LIST
DBP	M7162-CX001	C	[A] 00			UDA # 2
			[B]	DES.ENG: J. PULSIPHER	DATE: 20-JAN-81	
			[C]			
			[D]			
			[E]			DOCUMENT NUMBER
			[F]	RESP.ENG.: B. MATHRANI	DATE: 20-JAN-81	
			[H]			SIZE CODE NUMBER REV
			[J]			
			[K]	MFG.ENG.: D. SWIFT	DATE: 20-JAN-81	K PL M7162-0-DBP C
			[L]			
			[M]	ASSEMBLY NUMBER:	TOP DOCUMENT NUMBER:	FILE NAME: EDIT #
			[N]	D-UA-M7162-0-0	#B-DD-M7162-0	Z1770C.PLS 21

"THIS DRAWING AND SPECIFICATIONS HEREIN, ARE THE PROPERTY OF DIGITAL EQUIPMENT CORPORATION AND SHALL NOT BE REPRODUCED OR COPIED OR USED IN WHOLE OR IN PART AS THE BASIS FOR THE MANUFACTURE OR SALE OF ITEMS WITHOUT WRITTEN PERMISSION.
COPYRIGHT (C) 1982. DIGITAL EQUIPMENT CORPORATION "

P A R T S L I S T

LINE	ITEM	DOCUMENT NUMBER	PART NUMBER	DESCRIPTION	QTY PER VARIATION 00	REFERENCE DESIGNATOR
23	23		1300316-00	470.0 .25 W 5.0 % CC	12	R201,R190,R189,R6,R21,R174,R173,
						CONT. R1,R7,R8,R176,R175,
24	24		1300365-00	1.0 K .25 W 5.0 % CC	1	R194
25	25		1300432-00	3.0 K .25 W 5.0 % CC	1	R203
26	26		1300479-00	10.0 K .25 W 5.0 % CC	1	R193
27	27		1301477-00	82.0 .25 W 5.0 % CC	5	R202,R3,R20,R19,R18
28	28		1302379-00	75.0 .25 W 5.0 % CC	8	R131,R130,R198,R199,R200,R197,
						CONT R196,R195
29	29		1302873-00	261.0 .25 W 1.0 % RN55D-F10	8	R132,R204,R147,R144,R148,R149,
						CONT. R165,R140
30	30		1302887-00	130.0 .25 W 1.0 % RN55D-F10	4	R2,R4,R17,R31
31	31		1303036-00	56.20 .25 W 1.0 % RN55D-F10	32	R56,R50,R55,R49,R27,R13,R26,R12,
						CONT. R114,R107,R113,R105,R85,R79,R84,
						CONT R78,R70,R65,R69,R64,R41,R36,R40,
						CONT R35,R126,R121,R125,R120,R99,R94,
						CONT R98,R93
32	32		1304863-00	316.0 .25 W 1.0 % RN55D-F10	32	R57,R51,R54,R48,R28,R14,R25,R11,
						CONT R115,R108,R112,R106,R86,R80,R83,
						CONT R77,R71,R66,R68,R63,R42,R37,R39,
						CONT R34,R127,R122,R124,R119,R100,
						CONT R95,R97,R92
33	33		1311522-00	200.0 .25 W 5.0 % CC	16	R157,R136,R139,R188,R186,R184,
						CONT R152,R131,R151,R154,R171,R191,
						CONT R133,R137,R167,R180
34	34		1312114-01	R NETWORK 8-470 5.0 % 10PIN	11	R300-R310
35	35		1312929-00	62.0 .25 W 5.0 % CC	8	R47,R10,R104,R76,R62,R33,R118,
						CONT R91
36	36		1318341-01	162.0 .25 W 1.0 % RN55D-F10	8	R169,R168,R143,R166,R134,R138,
						CONT. R146,R145
37	37		1318341-02	187.0 .25 W 1.0% RN55D-F100	16	R44,R46,R30,R9,R73,R60,R59,R53,
						CONT R102,R90,R88,R74,R129,R117,R116,
						CONT R75
38	38		1617533-00	DELAY= 250NS,5TAPS 14PIN DIP	1	E97
39	39		1618336-00	DELAY= 10NS	4	E28,E57,E34,E56
40	40		1618337-00	DELAY= 18NS	2	E53,E33
41	41		1618343-00	PULSE XFMR,RATIO 1:1:1, 800H	8	E4,E16,E40,E51,E10,E26,E43,E62
42	42		1618345-00	DELAY= 14NS	2	E47,E32
43	43		1910534-00	74S04 INVERTER GATE-HEX 1I	2	E108,E84
44	44		1910544-00	74S74 FF-D DUAL,EDGE TRIGG	6	E99,E85,E98,E79,E90,E105
45	45		1910545-00	74S112 FF-JK DUAL,EDGE TRIG.	1	E76
46	46		1910956-00	74S151 MUX 1 OF 8	1	E69
47	47		1910957-00	74S175 FF-D QUAD COMMON CLO	2	E81,E92
48	48		1911399-00	10102 NOR GATE,QUAD 2IN	4	E8,E23,E49,E70
49	49		1911401-00	10104 AND GATE,QUAD 2IN	1	E31
50	50		1911404-00	10107 XOR/NOR GATE,3-2IN	1	E35
51	51		1911414-00	10124 TTL TO ECL TRNSLTR	3	E60,E59,E65
52	52		1911415-01	10125 ECL TO TTL TRANSLATE	2	E66,E58
53	53		1911420-00	10174 DUAL 4 TO 1 MUX	2	E36,E46

DIGITAL	TITLE	SECTION	SIZE	CODE	DOCUMENT NUMBER	REV
	UDA # 2	A OF A	K	PL	M7162-0-DBP	C

LINE	ITEM	DOCUMENT NUMBER	PART NUMBER	DESCRIPTION	QTY PER VARIATION 00	REFERENCE DESIGNATOR
54	54		1911573-00	74S280 PARITY GEN/CHKR,9BIT	2	E91,E117
55	55		1911712-00	74S51 AND-OR GATE-INVERT D	2	E74,E73
56	56		1912096-00	DEC 74S86 XOR GATE,QUAD 2IN	1	E80
57	57		1912389-00	74S08 AND GATE-QUAD 2IN,PO	1	E83
58	58		1912746-00	DEC 74S37 NAND GATE-QUAD 2IN	1	E87
59	59		1912801-00	LS02 NOR-GATE-QUAD 2IN	1	E109
60	60		1912816-00	LS32 OR GATE-QUAD 2IN,POS	1	E88
61	61		1912820-00	LS51 A-O-I GATE 2-WIDE 2I	1	E86
62	62		1912833-00	LS109 FF-JK DUAL,POS EDGE	1	E75
63	63		1912847-00	LS157 MUX 1 OF 2(QUAD)	1	E113
64	64		1912848-00	LS158 MUX 1 OF 2 (QUAD)	1	E104
65	65		1912853-00	LS175 FF-D QUAD	1	E123
66	66		1912860-00	LS259 LATCH 8BIT	1	E136
67	67		1912863-00	LS273 FF-D OCTAL W/CLEAR	3	E147,E94,E95
68	68		1912864-00	LS279 LATCH,QUAD-S-R	1	E72
69	69		1913340-00	74S32 OR GATE-QUAD 2IN	2	E78,E67
70	70		1913493-01	74S241J OCTAL BUFFER,TRI-STA	4	E131,E132,E143,E144
71	71		1913671-00	74S374 FF-D OCTAL TRISTATE	4	E141,E129,E142,E130
72	72		1913939-00	LS191 COUNTER,SYNCHR. UP/D	2	E106,E107
73	73		1914082-01	74S163 COUNTER,SYNCH,UP/DOW	2	E77,E82
74	74		1914214-00	LS374 FF-D OCTAL EDGE TRIG	6	E135,E134,E145,E118,E119,E93
75	75		1915193-00	LS244 DRIVER,LINE,OCTAL,T	2	E96,E122
76	76		1916574-00	10114 RECEIVER,LINE,TRIPL	8	E15,E71,E3,E38,E25,E55,E9,E41
77	77		1917043-00	DC 018 SERIALIZER-DESERIALIZ	2	E120,E121
78	78		1917277-00	100131 FF-D TRIPLE	1	E44
79	79		1917289-00	100102 OR/NOR GATE,QUINT,2	2	E45,E29
80	80		1917839-00	10192 LINE DRIVER,QUAD DIF	8	E2,E14,E42,E61,E7,E13,E39,E50
81	81		1917956-00	74LS280N PARITY GEN/CHK,9BIT	1	E68
82	82		1918352-00	PS 4317 DC-DC CONVERTER	1	B1
83	83		1918353-00	10231 FF-D MASTER-SLAVE	6	E30,E52,E64,E37,E48,E54
84	84		2115102-00	DEC DC309 NMOS CUSTOM LSI FOR	1	E133
85	85		2117498-02	6147P RAM,4KX1,STATIC,55NS	18	E101,E110,E114,E140,E139,E138,
						CONT E137,E111,E115,E100,E128,E127,
						CONT. E126,E125,E102,E103,E116,E112
86	86		9000024-01	EYELET,ROLLED 0.1210DX0.192	12	
87	87		9009185-00	JUMPER, WIRE, INSULATED, BLACK B	3	W1-W3
88	88		1611257-01	CHOKE(CERAMIC BEAD)AXIAL LEAD,ON	2	L1,L2
89	89		9105740-55	*** THIS ITEM IS NOT USED ***	-	
90	90		9009157-00	*** THIS ITEM IS NOT USED ***	-	
91	91		4901259-00	*** THIS ITEM IS NOT USED ***	-	
92	92		9107256-11	*** THIS ITEM IS NOT USED ***	-	
93	93		1001796-00	50 MFD 25V +75-10% AL EL	1	C139

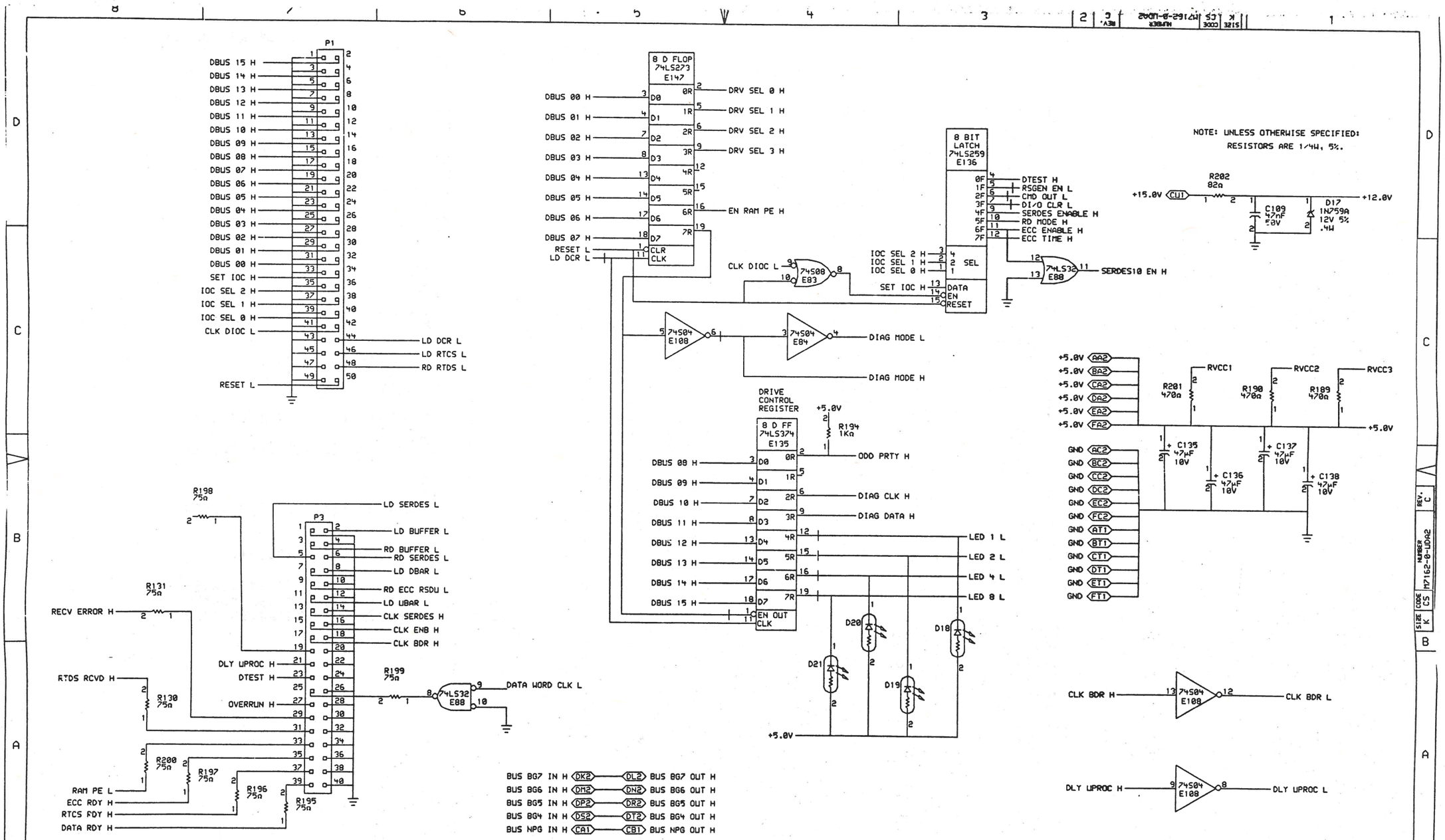

"THIS DRAWING AND SPECIFICATIONS, HEREIN, ARE THE PROPERTY OF DIGITAL EQUIPMENT CORPORATION AND SHALL NOT BE REPRODUCED OR COPIED OR USED IN WHOLE OR IN PART AS THE BASIS FOR THE MANUFACTURE OR SALE OF ITEMS WITHOUT WRITTEN PERMISSION. COPYRIGHT © 1982, DIGITAL EQUIPMENT CORPORATION"

REVISIONS		
CHK	CHANGE NO.	REV
1376	M7162-CX001 WS 9-15-82 J. PULSIPHER	C

digital

PS:<DOUGHERTY>UDA2C1.DRW|14-SEP-82 17:39

FIRST USED ON OPTION/MODEL: UDA

DRN. S. Dougherty | DATE 14-SEP-82 | ENG. | DATE

CHK "D." | DATE | BOARD LOCATION: | SHEET 1 OF 16

NEXT HIGHER ASSEMBLY: B-DD-M7162-0

TITLE: UDA # 2

SIZE	CODE	NUMBER	REV.
K	CS	M7162-0-UDA2	C

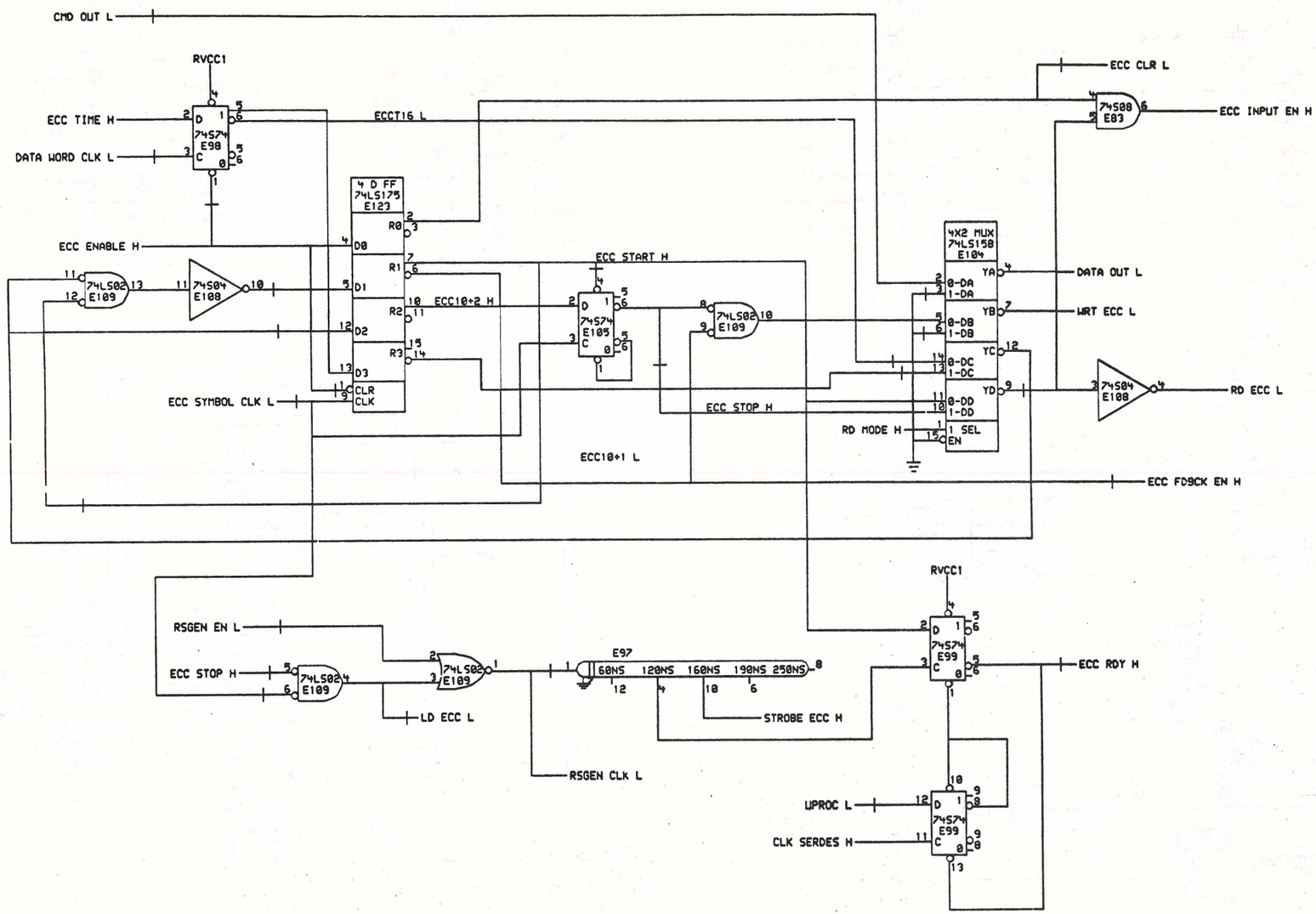

"THIS DRAWING AND SPECIFICATIONS, HEREIN, ARE THE PROPERTY OF DIGITAL EQUIPMENT CORPORATION AND SHALL NOT BE REPRODUCED OR COPIED OR USED IN WHOLE OR IN PART AS THE BASIS FOR THE MANUFACTURE OR SALE OF ITEMS WITHOUT WRITTEN PERMISSION. COPYRIGHT © 1982, DIGITAL EQUIPMENT CORPORATION."

REVISIONS		
CHK	CHANGE NO.	REV

DRN. | DATE 14-SEP-82 | ENG. | DATE | TITLE: UDA # 2

CHK'D. | DATE | BOARD LOCATION: SHEET 2 OF 16

PS:<DOUGHERTY>UDA2C2.DRW;14-SEP-82 17:39 | NEXT HIGHER ASSEMBLY: B-DD-M7162-0

FIRST USED ON OPTION/MODEL: UDA

SIZE	CODE	NUMBER	REV.
K	CS	M7162-0-UDA2	C

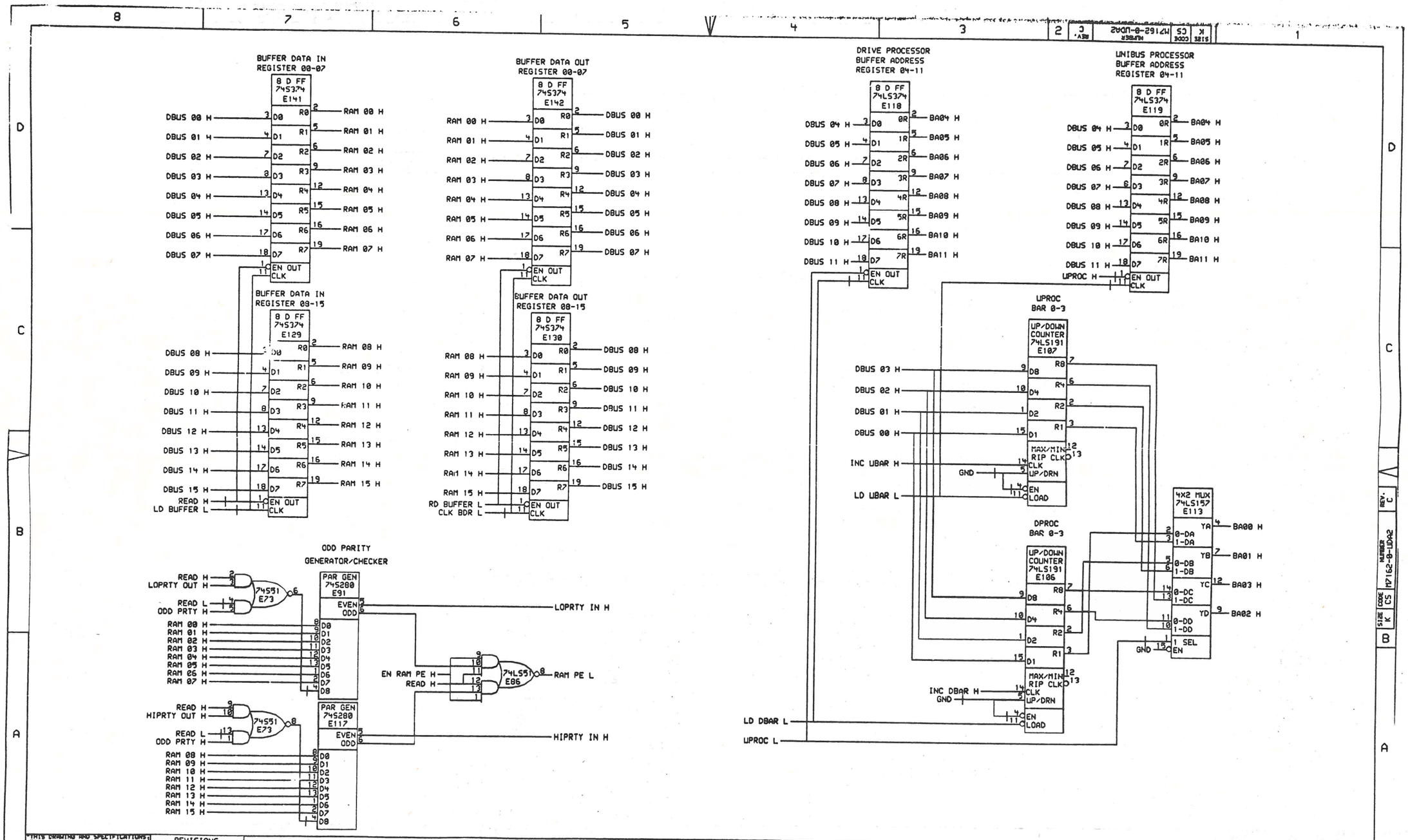

"THIS DRAWING AND SPECIFICATIONS, HEREIN, ARE THE PROPERTY OF DIGITAL EQUIPMENT CORPORATION AND SHALL NOT BE REPRODUCED OR COPIED OR USED IN WHOLE OR IN PART AS THE BASIS FOR THE MANUFACTURE OR SALE OF ITEMS WITHOUT WRITTEN PERMISSION. COPYRIGHT © 1982, DIGITAL EQUIPMENT CORPORATION"

REVISIONS		
CHK	CHANGE NO.	REV

digital

DRN.	DATE 14-SEP-82	ENG.	DATE
CHK'D.	DATE	BOARD LOCATION: SHEET 3 OF 16	

PS1(DOUGHERTY)UDA2C3.DRW|14-SEP-82 17:39

FIRST USED ON OPTION/MODEL: UDA

NEXT HIGHER ASSEMBLY: B-DD-M7162-0

TITLE: UDA # 2

SIZE	CODE	NUMBER	REV.
K	CS	M7162-0-UDA2	C

BUFFER MEMORY

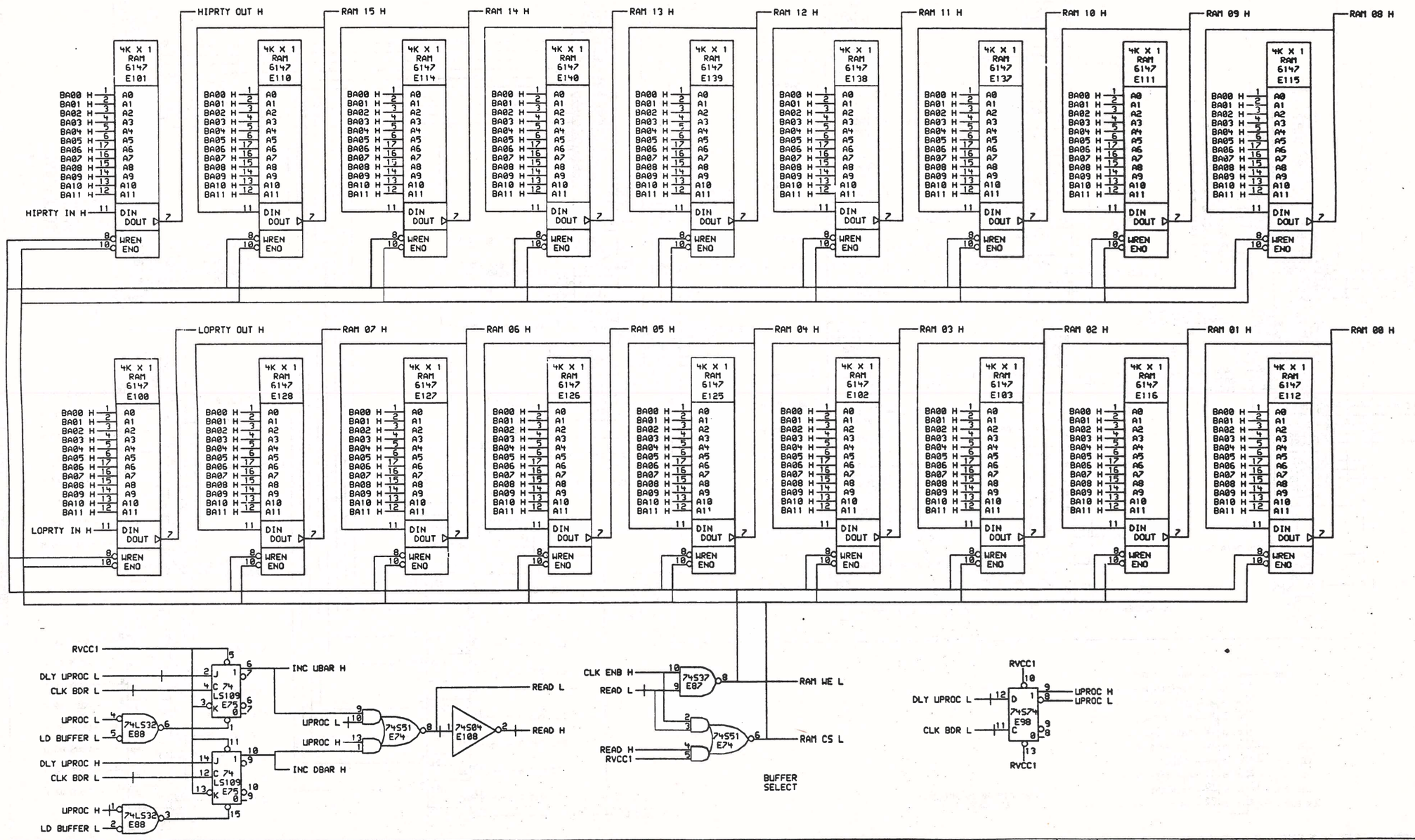

"THIS DRAWING AND SPECIFICATIONS, HEREIN, ARE THE PROPERTY OF DIGITAL EQUIPMENT CORPORATION AND SHALL NOT BE REPRODUCED OR COPIED OR USED IN WHOLE OR IN PART AS THE BASIS FOR THE MANUFACTURE OR SALE OF ITEMS WITHOUT WRITTEN PERMISSION. COPYRIGHT © 1982, DIGITAL EQUIPMENT CORPORATION"

REVISIONS		
CHK	CHANGE NO.	REV

digital

DRN.	DATE 14-SEP-82	ENG.	DATE
CHK'D.	DATE	BOARD LOCATION: SHEET 4 OF 16	
PS:<DOUGHERTY>UDA2C4.DRW 14-SEP-82 17:39		NEXT HIGHER ASSEMBLY:	
FIRST USED ON OPTION/MODEL: UDA		B-DD-M7162-0	

TITLE: UDA # 2

SIZE	CODE	NUMBER	REV.
K	CS	M7162-0-UDA2	C

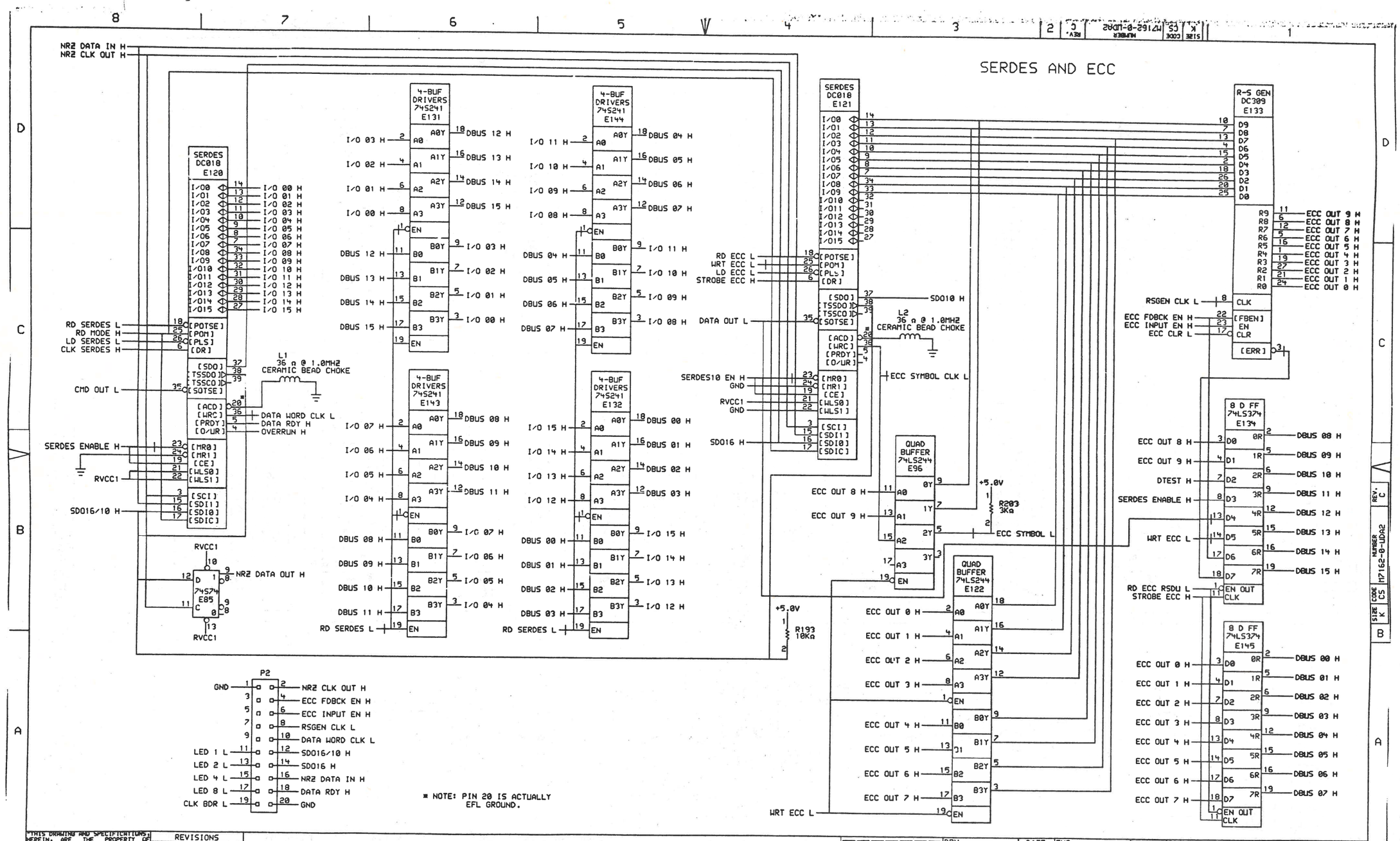

"THIS DRAWING AND SPECIFICATIONS, HEREIN, ARE THE PROPERTY OF DIGITAL EQUIPMENT CORPORATION AND SHALL NOT BE REPRODUCED OR COPIED OR USED IN WHOLE OR IN PART AS THE BASIS FOR THE MANUFACTURE OR SALE OF ITEMS WITHOUT WRITTEN PERMISSION. COPYRIGHT © 1982, DIGITAL EQUIPMENT CORPORATION"

REVISIONS		
CHK	CHANGE NO.	REV

digital

DRN. | DATE 14-SEP-82 | ENG. | DATE
CHK'D. | DATE | BOARD LOCATION: SHEET 5 OF 16

PS:<DOUGHERTY>UDA2C5.DRW 14-SEP-82 17:40
FIRST USED ON OPTION/MODEL: UDA
NEXT HIGHER ASSEMBLY: B-DD-M7162-0

TITLE: UDA # 2

SIZE	CODE	NUMBER	REV.
K	CS	M7162-0-UDA2	C

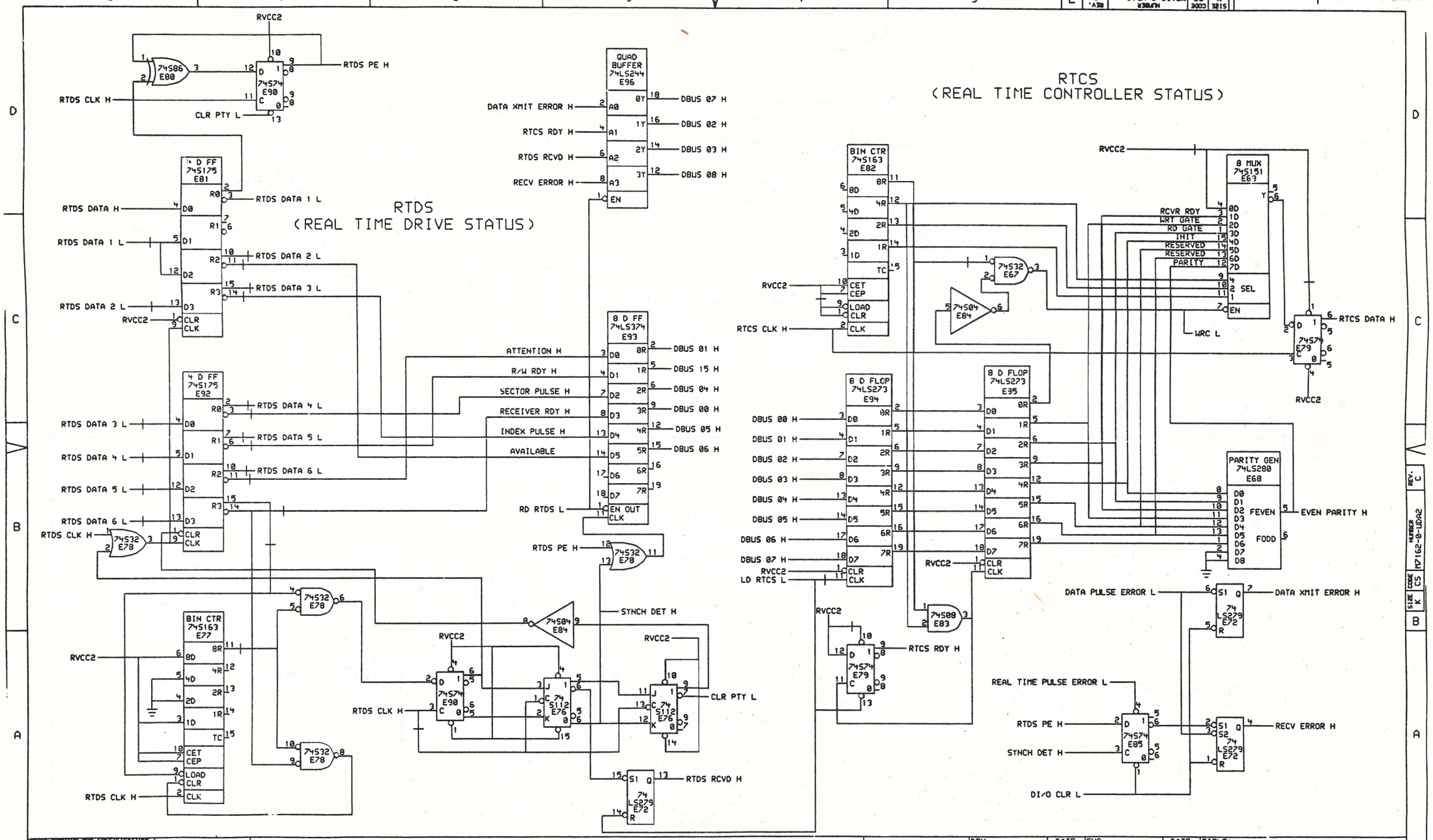

"THIS DRAWING AND SPECIFICATIONS, HEREIN, ARE THE PROPERTY OF DIGITAL EQUIPMENT CORPORATION AND SHALL NOT BE REPRODUCED OR COPIED OR USED IN WHOLE OR IN PART AS THE BASIS FOR THE MANUFACTURE OR SALE OF ITEMS WITHOUT WRITTEN PERMISSION. COPYRIGHT © 1982, DIGITAL EQUIPMENT CORPORATION"

REVISIONS		
CHK	CHANGE NO.	REV

DRN.	DATE 14-SEP-82	ENG.	DATE	TITLE: UDA # 2	
CHK'D.	DATE	BOARD LOCATION: SHEET 6 OF 16			
PS:<DOUGHERTY>UDA2C6.DRW 14-SEP-82 17:40		NEXT HIGHER ASSEMBLY:		SIZE K / CODE CS / NUMBER M7162-0-UDA2	REV. C
FIRST USED ON OPTION/MODEL: UDA		B-DD-M7162-0			

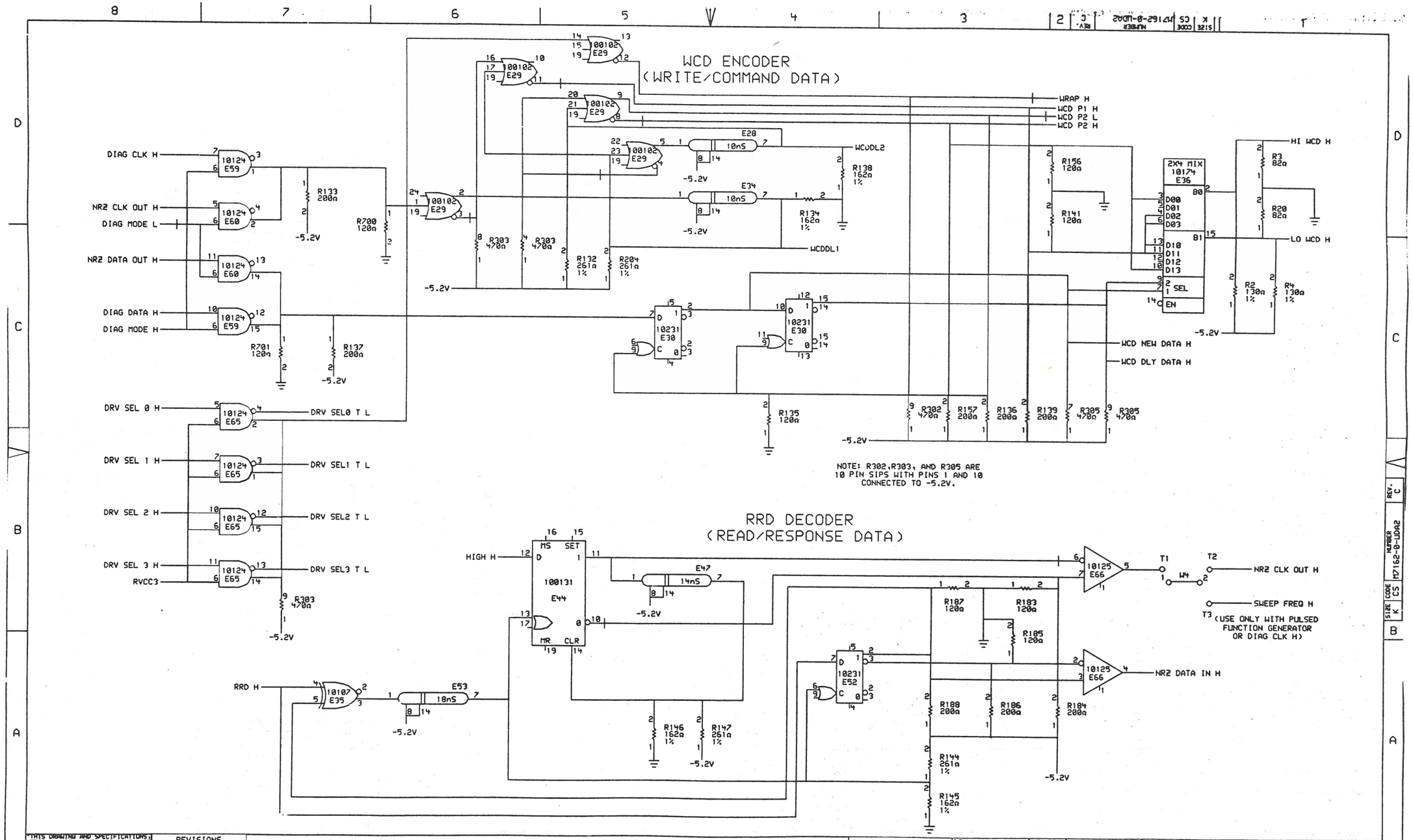

"THIS DRAWING AND SPECIFICATIONS, HEREIN, ARE THE PROPERTY OF DIGITAL EQUIPMENT CORPORATION AND SHALL NOT BE REPRODUCED OR COPIED OR USED IN WHOLE OR IN PART AS THE BASIS FOR THE MANUFACTURE OR SALE OF ITEMS WITHOUT WRITTEN PERMISSION. COPYRIGHT © 1982, DIGITAL EQUIPMENT CORPORATION"

REVISIONS		
CHK	CHANGE NO.	REV

digital

DRN.	DATE 14-SEP-82	ENG.	DATE
CHK'D.	DATE	BOARD LOCATION: SHEET 7 OF 16	
PS:<DOUGHERTY>UDA2C7.DWG 14-SEP-82 17:41		NEXT HIGHER ASSEMBLY:	
FIRST USED ON OPTION/MODEL: UDA		B-DD-M7162-0	

TITLE: UDA # 2

SIZE	CODE	NUMBER	REV.
K	CS	M7162-0-UDA2	C

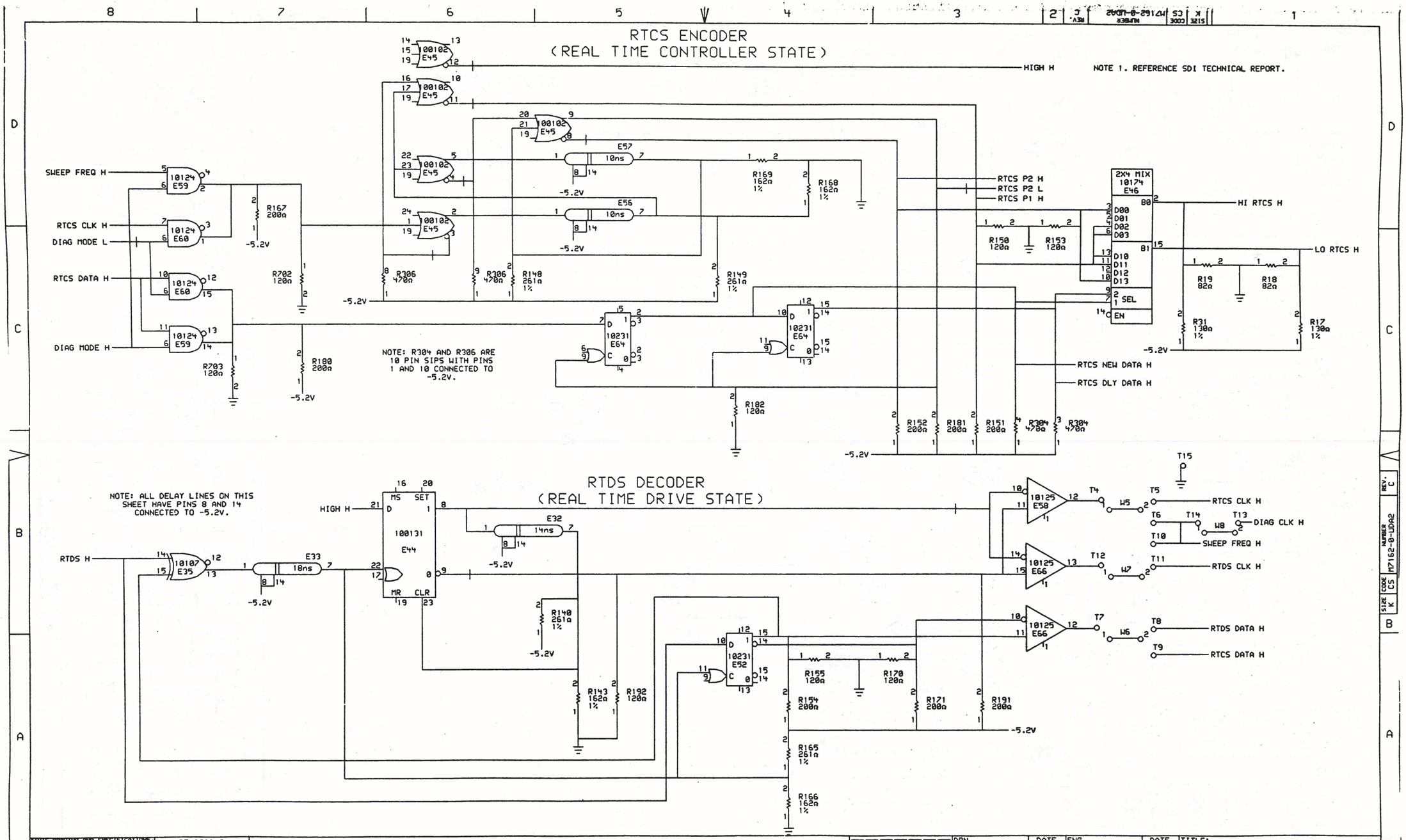

"THIS DRAWING AND SPECIFICATIONS, HEREIN, ARE THE PROPERTY OF DIGITAL EQUIPMENT CORPORATION AND SHALL NOT BE REPRODUCED OR COPIED OR USED IN WHOLE OR IN PART AS THE BASIS FOR THE MANUFACTURE OR SALE OF ITEMS WITHOUT WRITTEN PERMISSION. COPYRIGHT © 1982, DIGITAL EQUIPMENT CORPORATION"

REVISIONS		
CHK	CHANGE NO.	REV

digital

DRN.	DATE 14-SEP-82	ENG.	DATE
CHK'D.	DATE	BOARD LOCATION: SHEET 8 OF 16	
PS:<DOUGHERTY>UDA2C8.DRW;14-SEP-82 17:41		NEXT HIGHER ASSEMBLY:	
FIRST USED ON OPTION/MODEL: UDA		B-DD-M7162-0	

TITLE: UDA # 2

SIZE	CODE	NUMBER	REV.
K	CS	M7162-0-UDA2	C

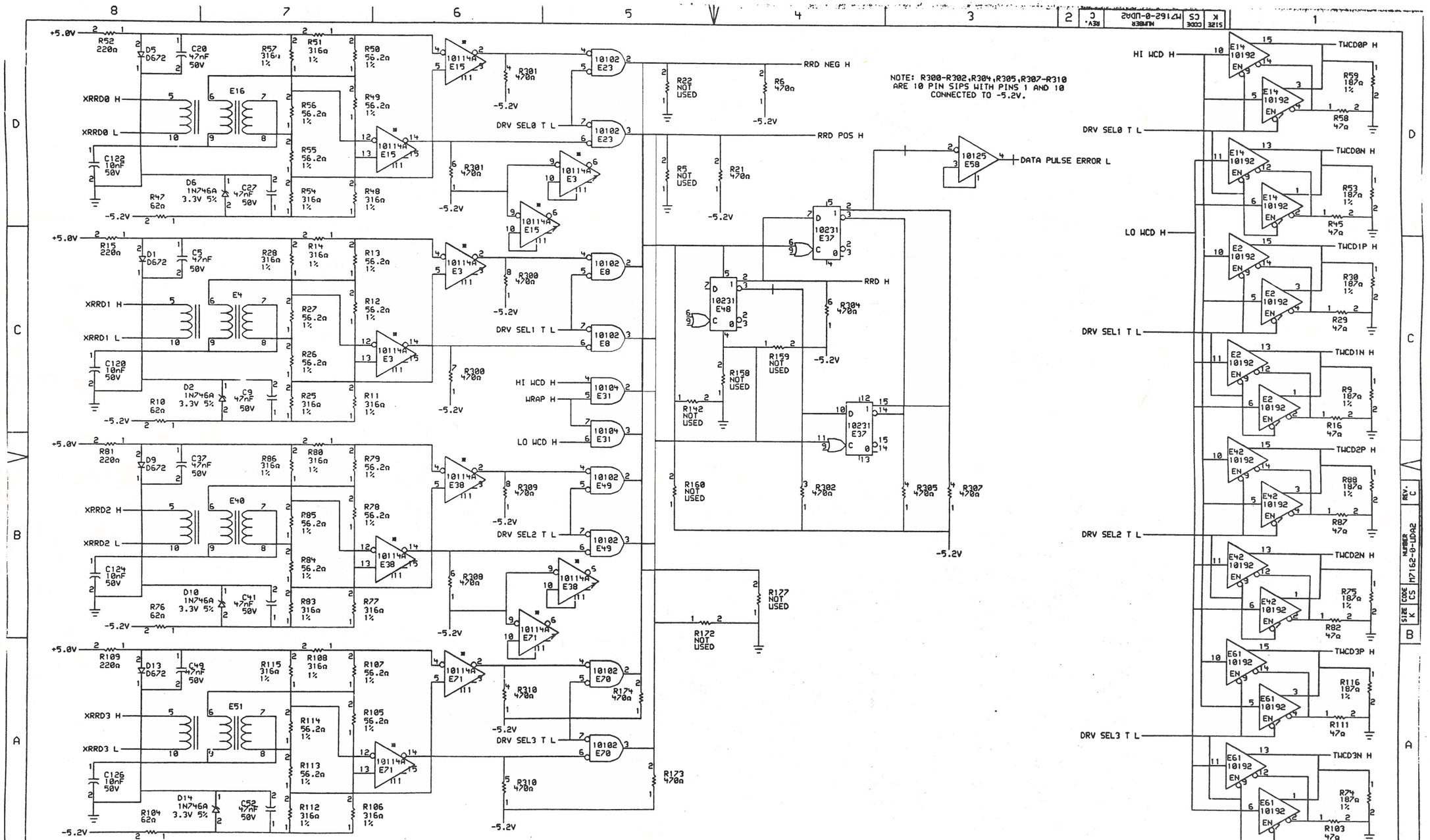

"THIS DRAWING AND SPECIFICATIONS, HEREIN, ARE THE PROPERTY OF DIGITAL EQUIPMENT CORPORATION AND SHALL NOT BE REPRODUCED OR COPIED OR USED IN WHOLE OR IN PART AS THE BASIS FOR THE MANUFACTURE OR SALE OF ITEMS WITHOUT WRITTEN PERMISSION. COPYRIGHT © 1982, DIGITAL EQUIPMENT CORPORATION"

REVISIONS		
CHK	CHANGE NO.	REV

DRN.	DATE 14-SEP-82	ENG.	DATE
CHK'D.	DATE	BOARD LOCATION: SHEET 9 OF 16	
PS:<DOUGHERTY>UDA2C9.DRW 14-SEP-82 17:42		NEXT HIGHER ASSEMBLY:	
FIRST USED ON OPTION/MODEL: UDA		B-DD-M7162-0	

TITLE: UDA # 2

SIZE	CODE	NUMBER	REV.
K	CS	M7162-0-UDA2	C

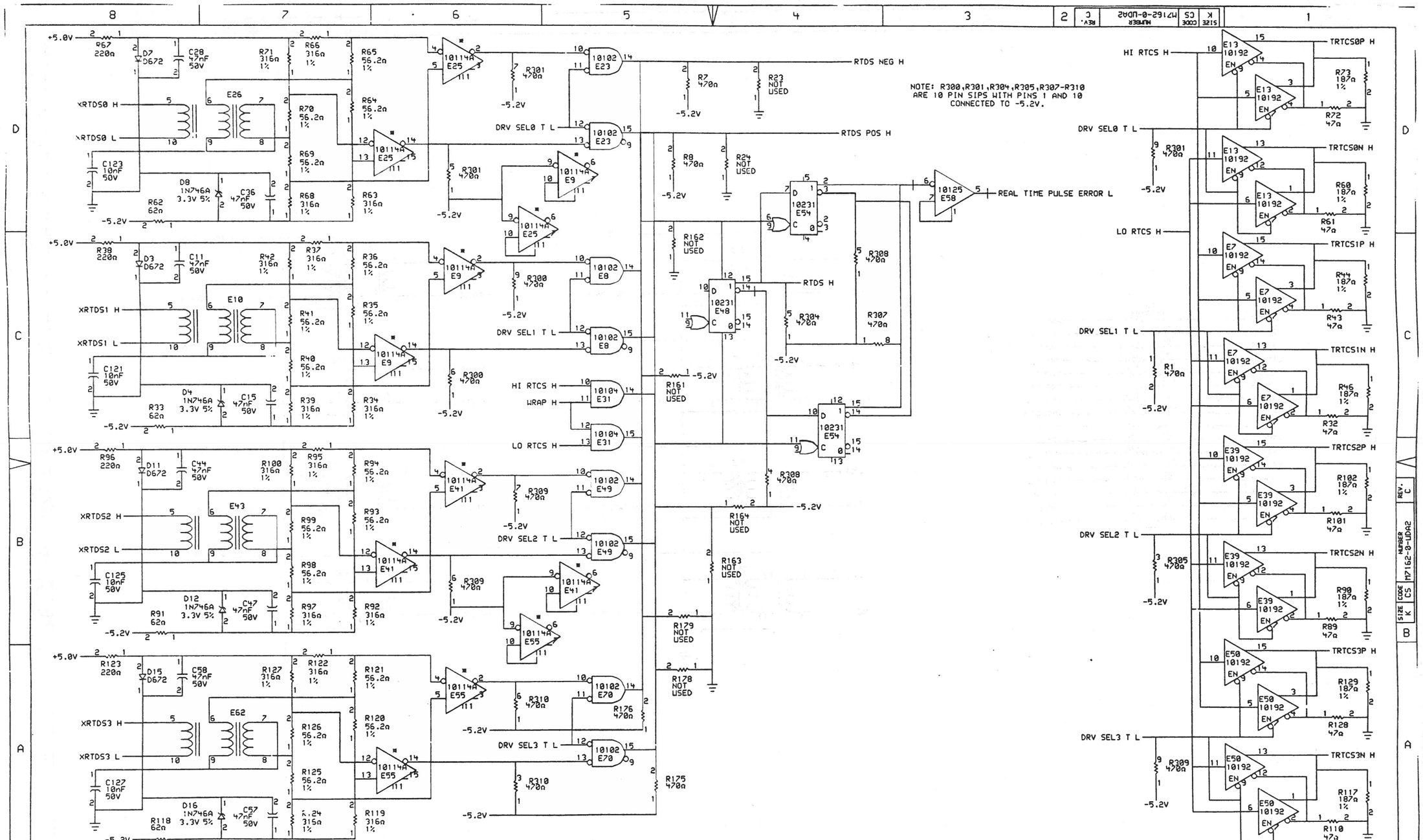

THIS DRAWING AND SPECIFICATIONS, HEREIN, ARE THE PROPERTY OF DIGITAL EQUIPMENT CORPORATION AND SHALL NOT BE REPRODUCED OR COPIED OR USED IN WHOLE OR IN PART AS THE BASIS FOR THE MANUFACTURE OR SALE OF ITEMS WITHOUT WRITTEN PERMISSION. COPYRIGHT © 1982, DIGITAL EQUIPMENT CORPORATION

REVISIONS		
CHK	CHANGE NO.	REV

digital

DRN.	LATE 14-SEP-82	ENG.	DATE
CHK'D.	DATE	BOARD LOCATION: SHEET 10 OF 16	

PS:<DOUGHERTY>UDA2CA.DRU 14-SEP-82 17:42

FIRST USED ON OPTION/MODEL: UDA

NEXT HIGHER ASSEMBLY: B-DD-M7162-0

TITLE: UDA # 2

SIZE	CODE	NUMBER	REV.
K	CS	M7162-0-UDA2	C

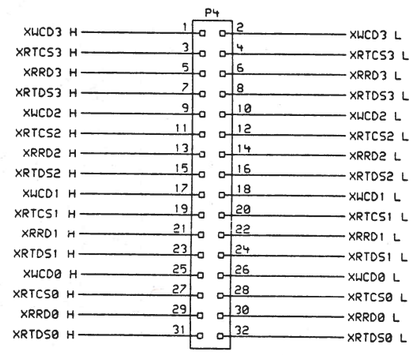

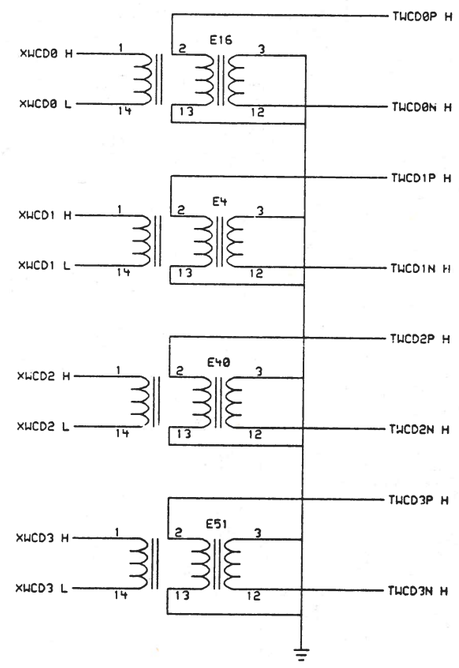

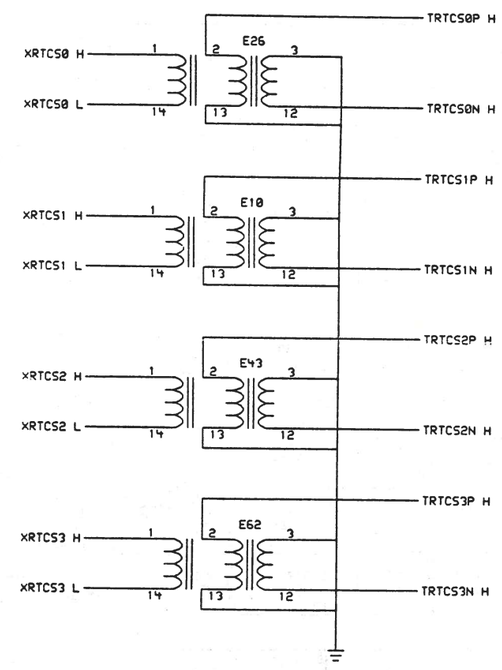

"THIS DRAWING AND SPECIFICATIONS, HEREIN, ARE THE PROPERTY OF DIGITAL EQUIPMENT CORPORATION AND SHALL NOT BE REPRODUCED OR COPIED OR USED IN WHOLE OR IN PART AS THE BASIS FOR THE MANUFACTURE OR SALE OF ITEMS WITHOUT WRITTEN PERMISSION. COPYRIGHT © 1982, DIGITAL EQUIPMENT CORPORATION"

REVISIONS		
CHK	CHANGE NO.	REV

digital

DRN. | DATE 14-SEP-82 | ENG. | DATE
CHK'D. | DATE | BOARD LOCATION: SHEET 11 OF 16

PS:<DOUGHERTY>UDA2C3.DPW|14-SEP-82 17:43| NEXT HIGHER ASSEMBLY: B-DD-M7162-0

FIRST USED ON OPTION/MODEL: UDA

TITLE: UDA # 2

SIZE	CODE	NUMBER	REV.
K	CS	M7162-0-UDA2	C

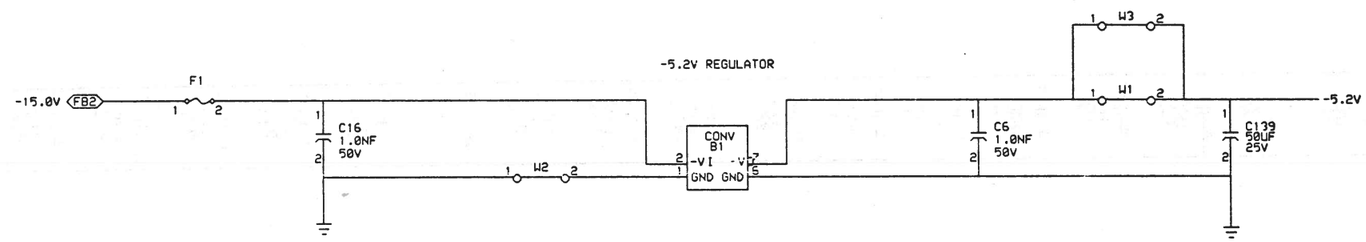

NOTE:
1nF CAPS MUST BE AS CLOSE
AS POSSIBLE TO THE REGULATOR.

"THIS DRAWING AND SPECIFICATIONS, HEREIN, ARE THE PROPERTY OF DIGITAL EQUIPMENT CORPORATION AND SHALL NOT BE REPRODUCED OR COPIED OR USED IN WHOLE OR IN PART AS THE BASIS FOR THE MANUFACTURE OR SALE OF ITEMS WITHOUT WRITTEN PERMISSION. COPYRIGHT © 1982, DIGITAL EQUIPMENT CORPORATION"

REVISIONS		
CHK	CHANGE NO.	REV

DRN. | DATE 14-SEP-82 | ENG. | DATE
CHK'D. | DATE | BOARD LOCATION: SHEET 12 OF 16
PS:<DOUGHERTY>UDA2CC.DRW 14-SEP-82 12:43 | NEXT HIGHER ASSEMBLY: B-DD-M7162-0
FIRST USED ON OPTION/MODEL: UDA

TITLE: UDA # 2

SIZE	CODE	NUMBER	REV.
K	CS	M7162-0-UDA2	C

"THIS DRAWING AND SPECIFICATIONS, HEREIN, ARE THE PROPERTY OF DIGITAL EQUIPMENT CORPORATION AND SHALL NOT BE REPRODUCED OR COPIED OR USED IN WHOLE OR IN PART AS THE BASIS FOR THE MANUFACTURE OR SALE OF ITEMS WITHOUT WRITTEN PERMISSION. COPYRIGHT © 1982, DIGITAL EQUIPMENT CORPORATION"

REVISIONS		
CHK	CHANGE NO.	REV

digital

DRN. DATE 14-SEP-82 ENG. DATE
CHK'D. DATE
BOARD LOCATION:
SHEET 13 OF 16
PS:<CCUGHERTY>UDA2CD.DRW|14-SEP-82 17:43 NEXT HIGHER ASSEMBLY:
FIRST USED ON OPTION/MODEL: UDA 3-DD-M7162-0

TITLE: UDA # 2

SIZE	CODE	NUMBER	REV.
K	CS	M7162-0-UDA2	C

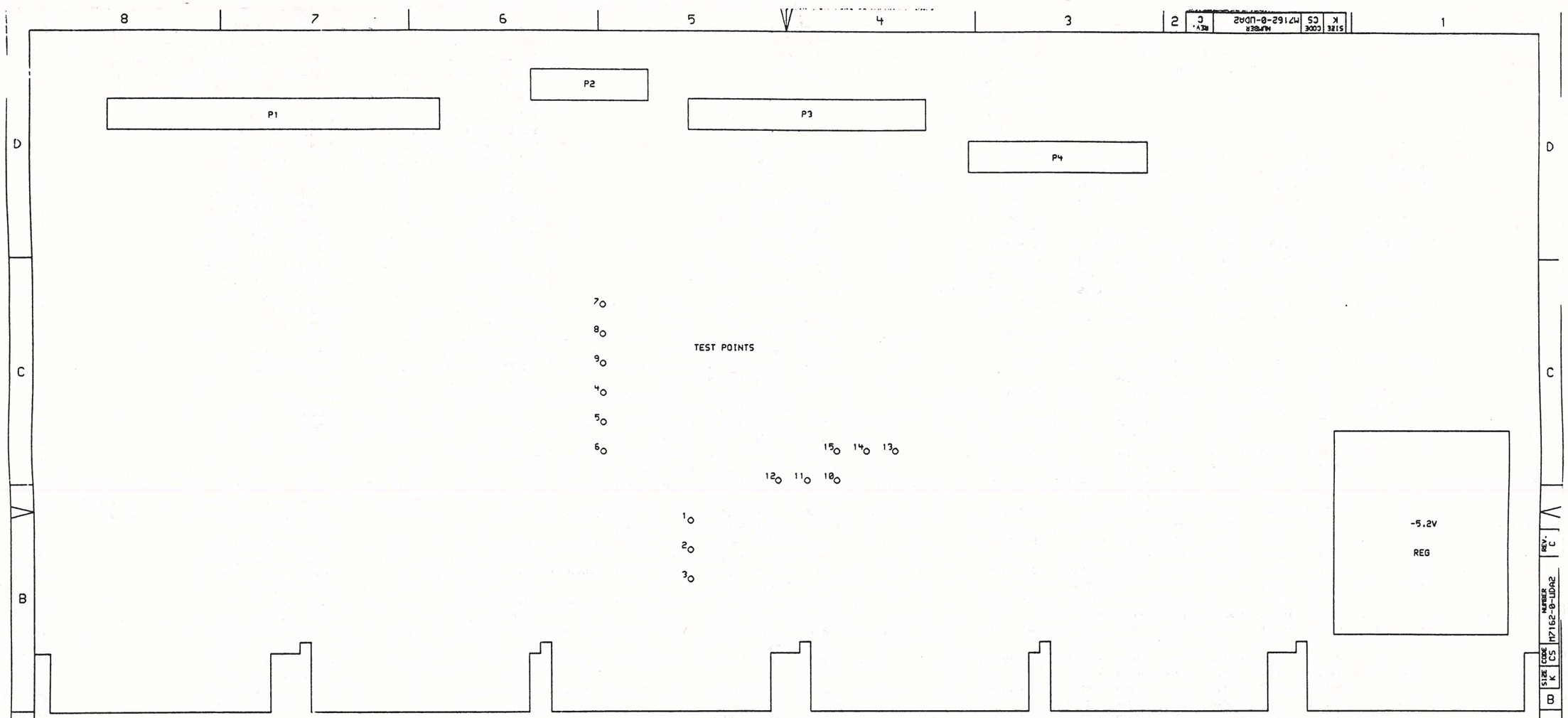

NOTE: JUMPER CONFIGURATIONS

NORMAL CONFIGURATIONS	TTL WRAPAROUND W/DIAG CLK	TTL WRAPAROUND W/PULSED EXT CLK
1 - 2	2 - 3	2 - 3
4 - 5	5 - 6	5 - 6
7 - 8	8 - 9	8 - 9
11 - 12	10 - 11	10 - 11
13 - 14	13 - 14	14 - EXT CLK
		15 - EXT CLK GND

"THIS DRAWING AND SPECIFICATIONS, HEREIN, ARE THE PROPERTY OF DIGITAL EQUIPMENT CORPORATION AND SHALL NOT BE REPRODUCED OR COPIED OR USED IN WHOLE OR IN PART AS THE BASIS FOR THE MANUFACTURE OR SALE OF ITEMS WITHOUT WRITTEN PERMISSION. COPYRIGHT © 1982, DIGITAL EQUIPMENT CORPORATION"

REVISIONS		
CHK	CHANGE NO.	REV

digital

DRN. | DATE 14-SEP-82 | ENG. | DATE
CHK'D. | DATE | BOARD LOCATION: SHEET 14 OF 16

PS:<DOUGHERTY>UDA2CE.DRW|14-SEP-82 17:43 | NEXT HIGHER ASSEMBLY: B-DD-M7162-0
FIRST USED ON OPTION/MODEL: LC.

TITLE: UDA # 2

SIZE	CODE	NUMBER	REV.
K	CS	M7162-0-UDA2	C

Vertical location (A-D) Direction of line (Left, Right, Up, Down)
\ / or electrical (Input, Output, Both)
KEY: SS-VH,D or backplane pin (Pin)
/ \
Schematic Sheet Horizontal location (1-8)

```
+12.0V ........................ 1-D1,L
+15.0V ........................ 1-D2,R <CU1>
+5.0V ......................... 1-A4,R  1-C1,L  1-C4,D  5-B3,D  5-B4,D  9-A8,R
                 9-B8,R  9-C8,R  9-D8,R 10-A8,R 10-B8,R 10-C8,R 10-D8,R 13-C8,D
                13-C8,D 13-D8,D  1-C2,R <AA2>    1-C2,R <BA2>    1-C2,R <CA2>
                                 1-C2,R <DA2>    1-C2,R <EA2>    1-C2,R <FA2>
-15.0V ........................ 12-C7,R <FB2>
-5.2V ......................... 7-A2,D  7-A5,D  7-B4,R  7-B7,D  7-C1,R  7-C6,R
                 7-C7,D  7-C7,D  8-A3,L  8-A5,D  8-B4,R  8-C2,R  8-C7,D  8-C7,D
                 8-C7,R  9-A6,D  9-A6,D  9-A8,R  9-B3,D  9-B6,D  9-B6,D  9-B8,R
                 9-C4,D  9-C6,D  9-C6,D  9-C8,R  9-D4,D  9-D4,D  9-D6,D  9-D6,D
                 9-D8,R 10-A2,D 10-A6,R 10-A6,R 10-A8,R 10-B2,D 10-B4,L 10-B6,D
                10-B6,D 10-B8,R 10-C2,D 10-C4,D 10-C5,L 10-C6,D 10-C6,D 10-C8,R
                10-D2,D 10-D5,D 10-D5,D 10-D6,D 10-D6,D 10-D8,R 12-C2,L 13-A8,D
                                13-B8,D
BA00 H ........................ 3-B1,L  4-B2,R  4-B2,R  4-B3,R  4-B4,R  4-B5,R
                 4-B5,R  4-B6,R  4-B7,R  4-B8,R  4-D2,R  4-D2,R  4-D3,R  4-D4,R
                                 4-D5,R  4-D5,R  4-D6,R  4-D7,R  4-D8,R
BA01 H ........................ 3-B1,L  4-B2,R  4-B2,R  4-B3,R  4-B4,R  4-B5,R
                 4-B5,R  4-B6,R  4-B7,R  4-B8,R  4-D2,R  4-D2,R  4-D3,R  4-D4,R
                                 4-D5,R  4-D5,R  4-D6,R  4-D7,R  4-D8,R
BA02 H ........................ 3-B1,L  4-B2,R  4-B2,R  4-B3,R  4-B4,R  4-B5,R
                 4-B5,R  4-B6,R  4-B7,R  4-B8,R  4-D2,R  4-D2,R  4-D3,R  4-D4,R
                                 4-D5,R  4-D5,R  4-D6,R  4-D7,R  4-D8,R
BA03 H ........................ 3-B1,L  4-B2,R  4-B2,R  4-B3,R  4-B4,R  4-B5,R
                 4-B5,R  4-B6,R  4-B7,R  4-B8,R  4-D2,R  4-D2,R  4-D3,R  4-D4,R
                                 4-D5,R  4-D5,R  4-D6,R  4-D7,R  4-D8,R
BA04 H ........................ 3-D2,L  3-D3,L  4-B2,R  4-B2,R  4-B3,R  4-B4,R
                 4-B5,R  4-B5,R  4-B6,R  4-B7,R  4-B8,R  4-D2,R  4-D2,R  4-D3,R
                                 4-D4,R  4-D5,R  4-D5,R  4-D6,R  4-D7,R  4-D8,R
BA05 H ........................ 3-D2,L  3-D3,L  4-B2,R  4-B2,R  4-B3,R  4-B4,R
                 4-B5,R  4-B5,R  4-B6,R  4-B7,R  4-B8,R  4-D2,R  4-D2,R  4-D3,R
                                 4-D4,R  4-D5,R  4-D5,R  4-D6,R  4-D7,R  4-D8,R
BA06 H ........................ 3-D2,L  3-D3,L  4-B2,R  4-B2,R  4-B3,R  4-B4,R
                 4-B5,R  4-B5,R  4-B6,R  4-B7,R  4-B8,R  4-D2,R  4-D2,R  4-D3,R
                                 4-D4,R  4-D5,R  4-D5,R  4-D6,R  4-D7,R  4-D8,R
BA07 H ........................ 3-D2,L  3-D3,L  4-B2,R  4-B2,R  4-B3,R  4-B4,R
                 4-B5,R  4-B5,R  4-B6,R  4-B7,R  4-B8,R  4-D2,R  4-D2,R  4-D3,R
                                 4-D4,R  4-D5,R  4-D5,R  4-D6,R  4-D7,R  4-D8,R
BA08 H ........................ 3-D2,L  3-D3,L  4-B2,R  4-B2,R  4-B3,R  4-B4,R
                 4-B5,R  4-B5,R  4-B6,R  4-B7,R  4-B8,R  4-D2,R  4-D2,R  4-D3,R
                                 4-D4,R  4-D5,R  4-D5,R  4-D6,R  4-D7,R  4-D8,R
BA09 H ........................ 3-D2,L  3-D3,L  4-B2,R  4-B2,R  4-B3,R  4-B4,R
                 4-B5,R  4-B5,R  4-B6,R  4-B7,R  4-B8,R  4-D2,R  4-D2,R  4-D3,R
                                 4-D4,R  4-D5,R  4-D5,R  4-D6,R  4-D7,R  4-D8,R
BA10 H ........................ 3-D2,L  3-D3,L  4-B2,R  4-B2,R  4-B3,R  4-B4,R
                 4-B5,R  4-B5,R  4-B6,R  4-B7,R  4-B8,R  4-C2,R  4-C2,R  4-C3,R
                                 4-C4,R  4-C5,R  4-C5,R  4-C6,R  4-C7,R  4-C8,R
BA11 H ........................ 3-C2,L  3-C3,L  4-B2,R  4-B2,R  4-B3,R  4-B4,R
                 4-B5,R  4-B5,R  4-B6,R  4-B7,R  4-B8,R  4-C2,R  4-C2,R  4-C3,R
                                 4-C4,R  4-C5,R  4-C5,R  4-C6,R  4-C7,R  4-C8,R
BUS BG4 IN H .................. 1-A5,R <DS2>
BUS BG4 OUT H ................. 1-A5,L <DT2>
BUS BG5 IN H .................. 1-A5,R <DP2>
BUS BG5 OUT H ................. 1-A5,L <DR2>
BUS BG6 IN H .................. 1-A5,R <DM2>
BUS BG6 OUT H ................. 1-A5,L <DN2>
BUS BG7 IN H .................. 1-A5,R <DK2>
BUS BG7 OUT H ................. 1-A5,L <DL2>
BUS NPG IN H .................. 1-A5,R <CA1>
BUS NPG OUT H ................. 1-A5,L <CB1>
CLK BDR H ..................... 1-A2,R  1-B6,L
CLK BDR L ..................... 1-A1,L  3-B6,R  4-A3,R  4-A8,R  4-A8,R  5-A7,R
CLK DIOC L .................... 1-C4,R  1-C7,R
CLK ENB H ..................... 1-B6,L  4-A5,R
CLK SERDES H .................. 1-B6,L  2-A4,R  5-C8,R
CLR PTY L ..................... 6-A5,L  6-D7,R
CMD OUT L ..................... 1-D3,L  2-D7,R  5-C8,R
DATA OUT L .................... 2-C3,L  5-C4,R
DATA PULSE ERROR L ............ 6-B2,R  9-D3,L
DATA RDY H .................... 1-A8,R  5-A7,L  5-C7,L
DATA WORD CLK L ............... 1-A6,L  2-D7,R  5-A7,L  5-C7,L
DATA XMIT ERROR H ............. 6-B1,L  6-D5,R
DBUS 00 H ..................... 1-C7,R  1-D5,R  3-C3,R  3-D5,L  3-D7,R  5-A1,L
                                5-B5,R  5-C5,L  6-C4,R  6-C5,L
DBUS 01 H ..................... 1-C7,R  1-D5,R  3-C3,R  3-D5,L  3-D7,R  5-A1,L
                                5-B5,L  5-B5,R  6-B4,R  6-C5,L
DBUS 02 H ..................... 1-D5,R  1-D7,R  3-C3,R  3-D5,L  3-D7,R  5-A1,L
                                5-B5,L  5-B5,R  6-B4,R  6-D5,L
DBUS 03 H ..................... 1-D5,R  1-D7,R  3-C3,R  3-D5,L  3-D7,R  5-A1,L
                                5-B5,L  5-B5,R  6-B4,R  6-D5,L
DBUS 04 H ..................... 1-D5,R  1-D7,R  3-D2,R  3-D4,R  3-D5,L  3-D7,R
                                5-A1,L  5-C5,R  5-D5,L  6-B4,R  6-C5,L
DBUS 05 H ..................... 1-D5,R  1-D7,R  3-D2,R  3-D4,R  3-D5,L  3-D7,R
                                5-A1,L  5-C5,R  5-D5,L  6-B4,R  6-B5,L
DBUS 06 H ..................... 1-D5,R  1-D7,R  3-C7,R  3-D2,R  3-D4,R  3-D5,L
                                5-A1,L  5-C5,R  5-D5,L  6-B4,R  6-B5,L
DBUS 07 H ..................... 1-D5,R  1-D7,R  3-C5,L  3-C7,R  3-D2,R  3-D4,R
                                5-A1,L  5-C5,R  5-D5,L  6-B4,R  6-D5,L
DBUS 08 H ..................... 1-B5,R  1-D7,R  3-C5,L  3-C7,R  3-D2,R  3-D4,R
                                5-B6,R  5-C1,L  5-C6,L  6-D5,L
DBUS 09 H ..................... 1-B5,R  1-D7,R  3-C5,L  3-C7,R  3-D2,R  3-D4,R
                                5-B1,L  5-B6,L  5-B6,R
DBUS 10 H ..................... 1-B5,R  1-D7,R  3-C5,L  3-C7,R  3-D2,R  3-D4,R
                                5-B1,L  5-B6,L  5-B6,R
DBUS 11 H ..................... 1-B5,R  1-D7,R  3-C2,R  3-C4,R  3-C5,L  3-C7,R
                                5-B1,L  5-B6,L  5-B6,R
DBUS 12 H ..................... 1-B5,R  1-D7,R  3-C5,L  3-C7,R  5-B1,L  5-C6,R
                                5-D6,L
DBUS 13 H ..................... 1-B5,R  1-D7,R  3-B5,L  3-B7,R  5-B1,L  5-C6,R
                                5-D6,L
DBUS 14 H ..................... 1-B5,R  1-D7,R  3-B5,L  3-B7,R  5-B1,L  5-C6,R
                                5-D6,L
DBUS 15 H ..................... 1-B5,R  1-D7,R  3-B5,L  3-B7,R  5-B1,L  5-C6,R
                                5-D6,L  6-C5,L
DI/O CLR L .................... 1-D3,L  6-A2,R
DIAG CLK H .................... 1-B4,L  7-D8,R  8-B1,L
DIAG DATA H ................... 1-B4,L  7-C8,R
DIAG MODE H ................... 1-C4,L  7-C8,R  8-C8,R
DIAG MODE L ................... 1-C4,L  7-D8,R  8-C8,R
DLY UPROC H ................... 1-A2,R  1-A7,R  4-A8,R
DLY UPROC L ................... 1-A1,L  4-A3,R  4-A8,R
DRV SEL 0 H ................... 1-D5,L  7-C8,R
DRV SEL 1 H ................... 1-D5,L  7-B8,R
DRV SEL 2 H ................... 1-D5,L  7-B8,R
DRV SEL 3 H ................... 1-D5,L  7-B8,R
DRV SEL0 T L .................. 7-C7,L  9-D2,R  9-D5,R 10-D2,R 10-D5,R
DRV SEL1 T L .................. 7-B7,L  9-C2,R  9-C5,R 10-C2,R 10-C5,R
DRV SEL2 T L .................. 7-B7,L  9-B2,R  9-B5,R 10-B2,R 10-B5,R
DRV SEL3 T L .................. 7-B7,L  9-A2,R  9-A5,R 10-A2,R 10-A5,R
DTEST H ....................... 1-A7,R  1-D3,L  5-B2,R
ECC CLR L ..................... 2-D3,L  5-C2,R
ECC ENABLE H .................. 1-D3,L  2-C7,R
ECC FDBCK EN H ................ 2-B2,L  5-A7,L  5-C2,R
ECC INPUT EN H ................ 2-D2,L  5-A7,L  5-C2,R
ECC OUT 0 H ................... 5-A2,R  5-B3,R  5-C1,L
ECC OUT 1 H ................... 5-A2,R  5-B3,R  5-C1,L
ECC OUT 2 H ................... 5-A2,R  5-A3,R  5-C1,L
ECC OUT 3 H ................... 5-A2,R  5-A3,R  5-C1,L
ECC OUT 4 H ................... 5-A2,R  5-A3,R  5-C1,L
ECC OUT 5 H ................... 5-A2,R  5-A3,R  5-C1,L
ECC OUT 6 H ................... 5-A2,R  5-A3,R  5-D1,L
ECC OUT 7 H ................... 5-A2,R  5-A3,R  5-D1,L
ECC OUT 8 H ................... 5-B4,R  5-C2,R  5-D1,L
ECC OUT 9 H ................... 5-B2,R  5-B4,R  5-D1,L
ECC RDY H ..................... 1-A8,R  2-B3,L
ECC START H ................... 2-C5,L
ECC STOP H .................... 2-B6,R  2-C5,R
ECC SYMBOL CLK L .............. 2-C6,R  5-C3,L
ECC SYMBOL L .................. 5-B3,L
ECC TIME H .................... 1-D3,L  2-D7,R
ECC10+2 H ..................... 2-C6,L
ECCT16 L ...................... 2-D6,L
EN RAM PE H ................... 1-D5,L  3-A6,R
EVEN PARITY H ................. 6-B1,L
GND ........................... 3-A2,R  3-A3,R  3-B3,R  5-A7,L  5-A7,R  5-C4,R
                 5-C4,R  1-C2,R <AC2>    1-B2,R <AT1>    1-B2,R <BC2>
                 1-B2,R <BT1>    1-B2,R <CC2>    1-B2,R <CT1>    1-B2,R <DC2>
                 1-B2,R <DT1>    1-B2,R <EC2>    1-B2,R <ET1>    1-B2,R <FC2>
                                 1-B2,R <FT1>
HI RTCS H ..................... 8-D1,L 10-C5,R 10-D2,R
HI WCD H ...................... 7-D1,L  9-C5,R  9-D2,R
HIGH H ........................ 7-B6,R  8-B7,R  8-D3,L
HIPRTY IN H ................... 3-A5,L  4-C8,R
HIPRTY OUT H .................. 3-A7,R  4-D7,L
I/O 00 H ...................... 5-C6,L  5-D6,R  5-D7,L
I/O 01 H ...................... 5-C6,L  5-D6,R  5-D7,L
I/O 02 H ...................... 5-C6,L  5-D6,R  5-D7,L
I/O 03 H ...................... 5-C6,L  5-D6,R  5-D7,L
I/O 04 H ...................... 5-B6,L  5-B6,R  5-D7,L
I/O 05 H ...................... 5-B6,L  5-B6,R  5-D7,L
I/O 06 H ...................... 5-B6,L  5-B6,R  5-C7,L
I/O 07 H ...................... 5-B6,L  5-C6,R  5-C7,L
I/O 08 H ...................... 5-C5,L  5-C7,L  5-D5,R
I/O 09 H ...................... 5-C5,L  5-C7,L  5-D5,R
I/O 10 H ...................... 5-C5,L  5-C7,L  5-D5,R
I/O 11 H ...................... 5-C5,L  5-C7,L  5-D5,R
I/O 12 H ...................... 5-B5,L  5-B5,R  5-C7,L
I/O 13 H ...................... 5-B5,L  5-B5,R  5-C7,L
I/O 14 H ...................... 5-B5,L  5-B5,R  5-C7,L
I/O 15 H ...................... 5-B5,L  5-C5,R  5-C7,L
INC DBAR H .................... 3-A3,R  4-A7,L
INC UBAR H .................... 3-B3,R  4-A7,L
IOC SEL 0 H ................... 1-C3,R  1-C7,R
IOC SEL 1 H ................... 1-C3,R  1-C7,R
IOC SEL 2 H ................... 1-C3,R  1-C7,R
LD BUFFER L ................... 1-B6,L  3-B7,R  4-A8,R  4-A8,R
```

"THIS DRAWING AND SPECIFICATIONS, HEREIN, ARE THE PROPERTY OF DIGITAL EQUIPMENT CORPORATION AND SHALL NOT BE REPRODUCED OR COPIED OR USED IN WHOLE OR IN PART AS THE BASIS FOR THE MANUFACTURE OR SALE OF ITEMS WITHOUT WRITTEN PERMISSION. COPYRIGHT © 1982, DIGITAL EQUIPMENT CORPORATION"

REVISIONS		
CHK	CHANGE NO.	REV

digital

DRN.	DATE 15-SEP-82	ENG.	DATE
CHK'D.	DATE	BOARD LOCATION: SHEET 15 OF 16	
DSK:UDA2.T2P[4,50]	15-SEP-82 07:24	NEXT HIGHER ASSEMBLY:	
FIRST USED ON OPTION/MODEL: UDA		B-DD-M7162-0	

TITLE: UDA # 2

SIZE	CODE	NUMBER	REV.
K	CS	M7162-0-UDA2	C

SIZE K CODE CS NUMBER M7162-0-UDA2 REV. C

LD DBAR L	1-B6,L	3-A4,R		
LD DCR L	1-C5,R	1-C6,L		
LD ECC L	2-B6,L	5-C4,R		
LD RTCS L	1-C6,L	6-B4,R		
LD SERDES L	1-B6,L	5-C8,R		
LD UBAR L	1-B6,L	3-B3,R		
LED 1 L	1-B3,L	5-A7,R		
LED 2 L	1-B3,L	5-A7,R		
LED 4 L	1-B3,L	5-A7,R		
LED 8 L	1-B3,L	5-A7,R		
LO RTCS H	8-C1,L	10-B5,R	10-D2,R	
LO WCD H	7-D1,L	9-B5,R	9-D2,R	
LOPRTY IN H	3-B5,L	4-B8,R		
LOPRTY OUT H	3-B7,R	4-C7,L		
NRZ CLK OUT H	5-A7,L	5-D8,R	7-B1,L	7-D8,R
NRZ DATA IN H	5-A7,L	5-D8,R	7-A2,L	
NRZ DATA OUT H	5-B7,L	7-C8,R		
ODD PRTY H	1-B4,L	3-A7,R	3-B7,R	
OVERRUN H	1-A7,R	5-C7,L		
RAM 00 H	3-B7,R	3-D6,R	3-D7,L	4-C1,L
RAM 01 H	3-B7,R	3-D6,R	3-D7,L	4-C2,L
RAM 02 H	3-A7,R	3-D6,R	3-D7,L	4-C3,L
RAM 03 H	3-A7,R	3-D6,R	3-D7,L	4-C3,L
RAM 04 H	3-A7,R	3-D6,R	3-D7,L	4-C4,L
RAM 05 H	3-A7,R	3-D6,R	3-D7,L	4-C5,L
RAM 06 H	3-A7,R	3-C6,R	3-D7,L	4-C6,L
RAM 07 H	3-A7,R	3-C6,R	3-C7,L	4-C6,L
RAM 08 H	3-A7,R	3-C6,R	3-C7,L	4-D1,L
RAM 09 H	3-A7,R	3-C6,R	3-C7,L	4-D2,L
RAM 10 H	3-A7,R	3-C6,R	3-C7,L	4-D3,L
RAM 11 H	3-A7,R	3-C6,R	3-C7,L	4-D3,L
RAM 12 H	3-A7,R	3-C6,R	3-C7,L	4-D4,L
RAM 13 H	3-A7,R	3-B6,R	3-B7,L	4-D5,L
RAM 14 H	3-A7,R	3-B6,R	3-B7,L	4-D6,L
RAM 15 H	3-A7,R	3-B6,R	3-B7,L	4-D6,L
RAM CS L	4-A4,L			
RAM PE L	1-A8,R	3-A5,L		
RAM WE L	4-A4,L			
RD BUFFER L	1-B6,L	3-B6,R		
RD ECC L	2-C2,L	5-C4,R		
RD ECC RSDU L	1-B6,L	5-B2,R		
RD MODE H	1-D3,L	2-C3,R	5-C8,R	
RD RTDS L	1-C6,L	6-B5,R		
RD SERDES L	1-B6,L	5-B5,R	5-B6,R	5-C8,R
READ H	3-A6,R	3-A7,R	3-B7,R	3-B7,R 4-A5,L 4-A5,R
READ L	3-A7,R	3-B7,R	4-A5,L	4-A5,R
REAL TIME PULSE ERROR L	6-A2,R	10-D3,L		
RECV ERROR H	1-B8,R	6-A1,L	6-D5,R	
RESET L	1-C5,R	1-C7,R		
RRD H	7-A7,R	9-C4,L		
RRD NEG H	9-D4,L			
RRD POS H	9-D4,L			
RSGEN CLK L	2-A5,L	5-A7,L	5-C2,R	
RSGEN EN L	1-D3,L	2-B6,R		
RTCS CLK H	6-C4,R	8-B2,L	8-D8,R	
RTCS DATA H	6-C1,L	8-A2,L	8-C8,R	
RTCS DLY DATA H	8-C2,L			
RTCS NEW DATA H	8-C2,L			
RTCS P1 H	8-D3,L			
RTCS P2 H	8-D3,L			
RTCS P2 L	8-D3,L			

RTCS RDY H	1-A8,R	6-A3,L	6-D5,R			
RTDS CLK H	6-A6,R	6-A8,R	6-B8,R	6-D8,R	8-B2,L	
RTDS DATA 1 L	6-C8,R	6-D7,L				
RTDS DATA 2 L	6-C7,L	6-C8,R				
RTDS DATA 3 L	6-C7,L	6-C8,R				
RTDS DATA 4 L	6-B8,R	6-C7,L				
RTDS DATA 5 L	6-B7,L	6-B8,R				
RTDS DATA 6 L	6-B7,L	6-B8,R				
RTDS DATA H	6-D8,R	8-B2,L				
RTDS H	8-B8,R	10-C4,L				
RTDS NEG H	10-D4,L					
RTDS PE H	6-A3,R	6-B5,R	6-D7,L			
RTDS POS H	10-D4,L					
RTDS RCVD H	1-A8,R	6-A5,L	6-D5,R			
RVCC1	1-C2,L	2-B3,D	2-D7,D	4-A3,D	4-A3,D	4-A5,R
	4-A8,R	5-A7,D	5-B7,D	5-B8,R	5-C4,R	
RVCC2	1-C1,L	6-A5,R	6-A6,D	6-A8,R	6-B3,R	6-B4,D
	6-B4,R	6-C1,D	6-C4,R	6-C8,R	6-D2,R	6-D7,D
RVCC3	1-C1,L	7-B8,R				
SDO10 H	5-C3,L					
SDO16 H	5-A7,L	5-B4,R				
SDO16/10 H	5-A7,L	5-B8,R				
SERDES ENABLE H	1-D3,L	5-B2,R	5-B8,R			
SERDES10 EN H	1-C2,L	5-C4,R				
SET IOC H	1-C3,R	1-C7,R				
STROBE ECC H	2-B4,L	5-B2,R	5-C4,R			
SWEEP FREQ H	7-B1,L	8-B2,L	8-D8,R			
SYNCH DET H	6-A3,R	6-B5,L				
TRTCS0N H	10-D1,L	11-C2,L				
TRTCS0P H	10-D1,L	11-D2,L				
TRTCS1N H	10-C1,L	11-C2,L				
TRTCS1P H	10-C1,L	11-C2,L				
TRTCS2N H	10-B1,L	11-B2,L				
TRTCS2P H	10-B1,L	11-C2,L				
TRTCS3N H	10-A1,L	11-B2,L				
TRTCS3P H	10-A1,L	11-B2,L				
TWCD0N H	9-D1,L	11-C4,L				
TWCD0P H	9-D1,L	11-D4,L				
TWCD1N H	9-C1,L	11-C4,L				
TWCD1P H	9-C1,L	11-C4,L				
TWCD2N H	9-B1,L	11-B4,L				
TWCD2P H	9-B1,L	11-C4,L				
TWCD3N H	9-A1,L	11-B4,L				
TWCD3P H	9-A1,L	11-B4,L				
UPROC H	3-C2,R	4-A3,L	4-A6,R	4-A8,R		
UPROC L	2-A4,R	3-A4,R	4-A3,L	4-A6,R	4-A8,R	
WCD DLY DATA H	7-C2,L					
WCD NEW DATA H	7-C2,L					
WCD P1 H	7-D2,L					
WCD P2 H	7-D2,L					
WCD P2 L	7-D2,L					
WCDDL1	7-C4,L					
WCDDL2	7-D4,L					
WRAP H	7-D2,L	9-C5,R	10-C5,R			
WRC L	6-C2,L					
WRT ECC L	2-C3,L	5-A4,R	5-B2,R	5-C4,R		
XRRD0 H	9-D8,R	11-B7,R				
XRRD0 L	9-D8,R	11-B6,L				
XRRD1 H	9-C8,R	11-B7,R				
XRRD1 L	9-C8,R	11-B6,L				
XRRD2 H	9-B8,R	11-C7,R				

XRRD2 L	9-B8,R	11-C6,L
XRRD3 H	9-A8,R	11-C7,R
XRRD3 L	9-A8,R	11-C6,L
XRTCS0 H	11-B7,R	11-C3,R
XRTCS0 L	11-B6,L	11-C3,R
XRTCS1 H	11-C3,R	11-C7,R
XRTCS1 L	11-C3,R	11-C6,L
XRTCS2 H	11-B3,R	11-C7,R
XRTCS2 L	11-B3,R	11-C6,L
XRTCS3 H	11-B3,R	11-C7,R
XRTCS3 L	11-B3,R	11-C6,L
XRTDS0 H	10-D8,R	11-B7,R
XRTDS0 L	10-D8,R	11-B6,L
XRTDS1 H	10-C8,R	11-B7,R
XRTDS1 L	10-C8,R	11-B6,L
XRTDS2 H	10-B8,R	11-C7,R
XRTDS2 L	10-B8,R	11-C6,L
XRTDS3 H	10-A8,R	11-C7,R
XRTDS3 L	10-A8,R	11-C6,L
XWCD0 H	11-B7,R	11-C5,R
XWCD0 L	11-B6,L	11-C5,R
XWCD1 H	11-C5,R	11-C7,R
XWCD1 L	11-C5,R	11-C6,L
XWCD2 H	11-B5,R	11-C7,R
XWCD2 L	11-B5,R	11-C6,L
XWCD3 H	11-B5,R	11-C7,R
XWCD3 L	11-B5,R	11-C6,L

"THIS DRAWING AND SPECIFICATIONS, HEREIN, ARE THE PROPERTY OF DIGITAL EQUIPMENT CORPORATION AND SHALL NOT BE REPRODUCED OR COPIED OR USED IN WHOLE OR IN PART AS THE BASIS FOR THE MANUFACTURE OR SALE OF ITEMS WITHOUT WRITTEN PERMISSION. COPYRIGHT © 1982, DIGITAL EQUIPMENT CORPORATION"

REVISIONS		
CHK	CHANGE NO.	REV

DRN.	DATE 15-SEP-82	ENG.	DATE	TITLE: UDA # 2	
CHK'D.	DATE	BOARD LOCATION: SHEET 16 OF 16			
DSK:UDA2.T2P[4,50] 15-SEP-82 07:24		NEXT HIGHER ASSEMBLY:		SIZE K / CODE CS / NUMBER M7162-0-UDA2	REV. C
FIRST USED ON OPTION/MODEL: UDA		B-DD-M7162-0			