"THE MATERIAL HEREIN IS FOR INFORMATION PURPOSES ONLY AND IS SUBJECT TO CHANGE WITHOUT NOTICE. DIGITAL EQUIPMENT CORPORATION ASSUMES NO RESPONSIBILITY FOR ANY ERRORS WHICH MAY APPEAR HEREIN." 1978

FIELD MAINTENANCE PRINT SET

"THIS DRAWING AND SPECIFICATIONS, HEREIN, ARE THE PROPERTY OF DIGITAL EQUIPMENT CORPORATION AND SHALL NOT BE REPRODUCED OR COPIED OR USED IN WHOLE OR IN PART AS THE BASIS FOR THE MANUFACTURE OR SALE OF ITEMS WITHOUT WRITTEN PERMISSION. COPYRIGHT © 1978 DIGITAL EQUIPMENT CORPORATION."

TABLE OF CONTENTS

B-TC-VT100-0-1	VT100 UNIT ASSY. (TC)
E-UA-VT100-0-0	VT100 UNIT ASSY.
C-PL-VT100-0-0	VT100 UNIT ASSY. (PL)
E-UA-5413009-0-0	BASIC VIDEO BOARD
K-PL-5413009-0-DBP	BASIC VIDEO BOARD (PL)
D-CS-5413009-0-1	BASIC VIDEO BOARD (CS)
E-UA-5412996-0-0	H7831 POWER SUPPLY BOARD
K-PL-5412996-0-DBP	H7831 POWER SUPPLY BOARD (PL)
D-CS-5412996-0-1	H7831 POWER SUPPLY BOARD (CS)
D-AD-7014979-0-0	POWER SUPPLY ASSY.
E-UA-5413404-0-0	KEYBOARD ASSY.
K-PL-5413404-0-DBP	KEYBOARD ASSY. (PL)
D-CS-5413404-0-1	KEYBOARD ASSY. (CS)
D-AD-7015765-0-0	KEYBOARD/KEYCAP ASSY.
C-PL-7015765-0-0	KEYBOARD/KEYCAP ASSY. (PL)
D-AR-7015765-0-1	KEYCAP ARRANGEMENT (MAIN ARRAY & NUMERIC)
D-IA-7014978-0-0	POWER CABLE ASSY.
D-CS-3014590-0-1	CRT MONITOR (CS) (FOR PS-3014590-0-0)
E-UA-VT1XX-AA-0	20 MA CURRENT LOOP OPTION
E-UA-5413206-0-0	20 MA CURRENT LOOP
K-PL-5413206-0-DBP	20 MA CURRENT LOOP (PL)
D-CS-5413206-0-1	20MA CURRENT LOOP (CS)
D-IA-7015273-0-0	20 MA ADAPTER ASSY.
C-IA-7015506-0-0	CABLE, INTERNAL
C-UA-BC05F-0-0	CABLE INTERFACE BC05F
E-UA-5413097-0-0	ADVANCED VIDEO BOARD
K-PL-5413097-0-DBP	ADVANCED VIDEO BOARD (PL)
D-CS-5413097-0-1	ADVANCED VIDEO BOARD (CS)
A-PL-VT100-0	SHIPPING LIST VT100
A-SP-VT100-W-0	WORD PROCESSING TERMINAL INSTALLATION NOTES
D-UA-5414131-0-0	VT100 MONITOR
K-PL-5414131-0-DBP	VT100 MONITOR
D-CS-5414131-0-1	VT100 MONITOR

UNIT VARIATIONS COVERED BY THIS PRINT SET
VT100-AA
VT100-AB
VT100-NA
VT100-NB
VT100-WA
VT100-WB
VT100-WC
VT100-WD
VT100-WE
VT100-WF
VT100-WG
VT100-WH
VT100-WJ
VT100-WK
VT100-WY
VT100-WZ
VT100-LA
VT100-LB
VT100-PA
VT100-PB
VT100-PC
VT100-PD
VT100-PE
VT100-PF
VT100-BA
VT100-BB
VT100-CA
VT100-CB
VT100-DA
VT100-DB

VTIØØ-Ø

Field Maintenance Print Set

Digital Equipment Corporation

PRINT SET ORDER NO.
MP00633

REVISIONS		
REV	CHG. NO.	DATE
D	VTØØ-MLØ41	FEB-82
E	VTØØMLØ47	6-10-82

NR

USED ON OPTION/MODEL

SHEET 1 OF 1

DRN. B. BLODGETT	DATE 27 OCT 77	digital
CHK'D D. HEALY	DATE 10 APR 78	TITLE: VT100 UNIT ASSY. (TABLE OF CONTENTS)
PROJ. ENG. G. DOUMANI	DATE 6-26-78	SIZE B / CODE TC / NUMBER VT100-0-1 / REV. E
FIELD SERV. J. ZALESKA	DATE 12 JUL78	DIST.

REV. E | NUMBER VT100-0-1 | CODE TC | SIZE B

DRB 124

ML3

NOTE: FOR LEGEND & LABEL INFORMATION REFER TO SHEET #2.

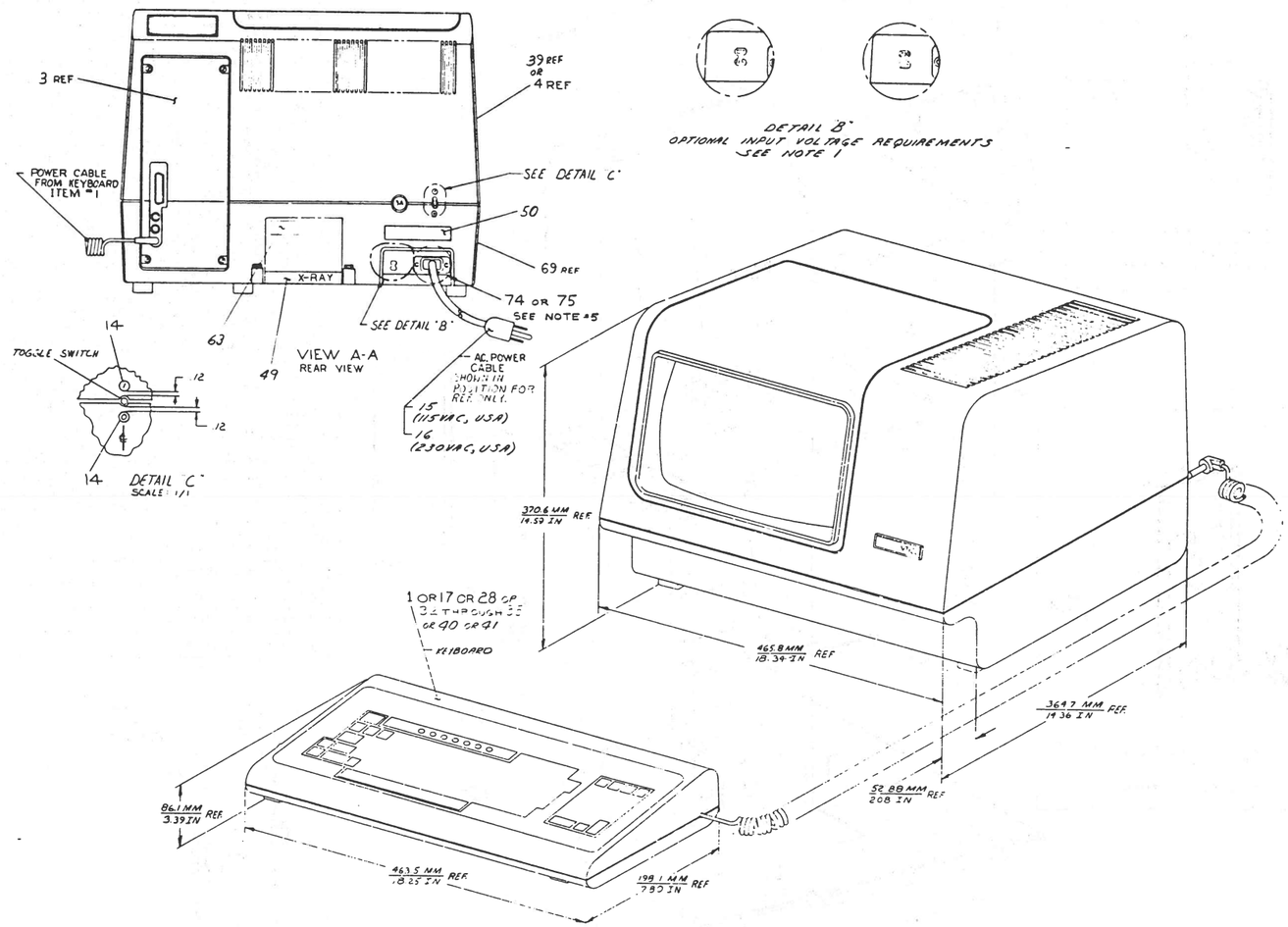

NOTE:
1. ALL VT100 UNIVERSAL TERMINALS ARE SHIPPED SET UP FOR 100-130 VAC, 60 HZ OPERATION. TERMINAL IS SWITCH SETABLE FOR 220-240 VAC, 50/60 HZ OPERATION BY SLIDING ACTUATOR TO POSITION SHOWN IN DETAIL B.
2. PACKAGING: WHEN SHIPPED, MATERIAL SHALL BE ADEQUATELY PROTECTED FROM HANDLING AND SHIPPING DAMAGE USING DIGITAL PACKAGING INSTRUCTION A-SP-3700324-0-0 OR A-SP-3700220-0-0.
3. TERMINAL IS SUPPLIED WITHOUT INTERFACE CABLES. ORDER INTERFACE CABLES FOR OPTIONS VT100-AA THRU VT100-DC
4. CL EICO
5. ITEM # 74 OR ITEM # 75 IS TO BE INSTALLED AFTER TEST LOCATED TO OBSCURE VOLTAGE SET-UP SWITCH AND AC POWER INLET.
6. SCREWS, ITEM #51 FOR SHIPPING ONLY.
7. THE CARRIAGE (7202154-00) MUST BE REPLACED WITH PC CARD FRAME (7010400-00) CARD CARRIAGE (7010424-00) AS A FIELD SERVICE REPLACEMENT USING: SPRING, LIP (7001243-00) QTY 2. PLUNGER (7009964-00) QTY 2. GROMMET (7007966-00) QTY 2. 2ND CHASSIS GROUNDING CABLE (7011412-00) QTY 1, WHICH IS CONNECTED TO THE CARD FRAME AND CHASSIS TO PROVIDE GROUND CONTINUITY.

CAUTION: OFF SHEET PARTS LIST EXISTS. SEE K-PL-VT100-0-DBP

TITLE	VT100 UNIT ASSY
SIZE	E
CODE	UA
NUMBER	VT100-0-0
REV	AJ

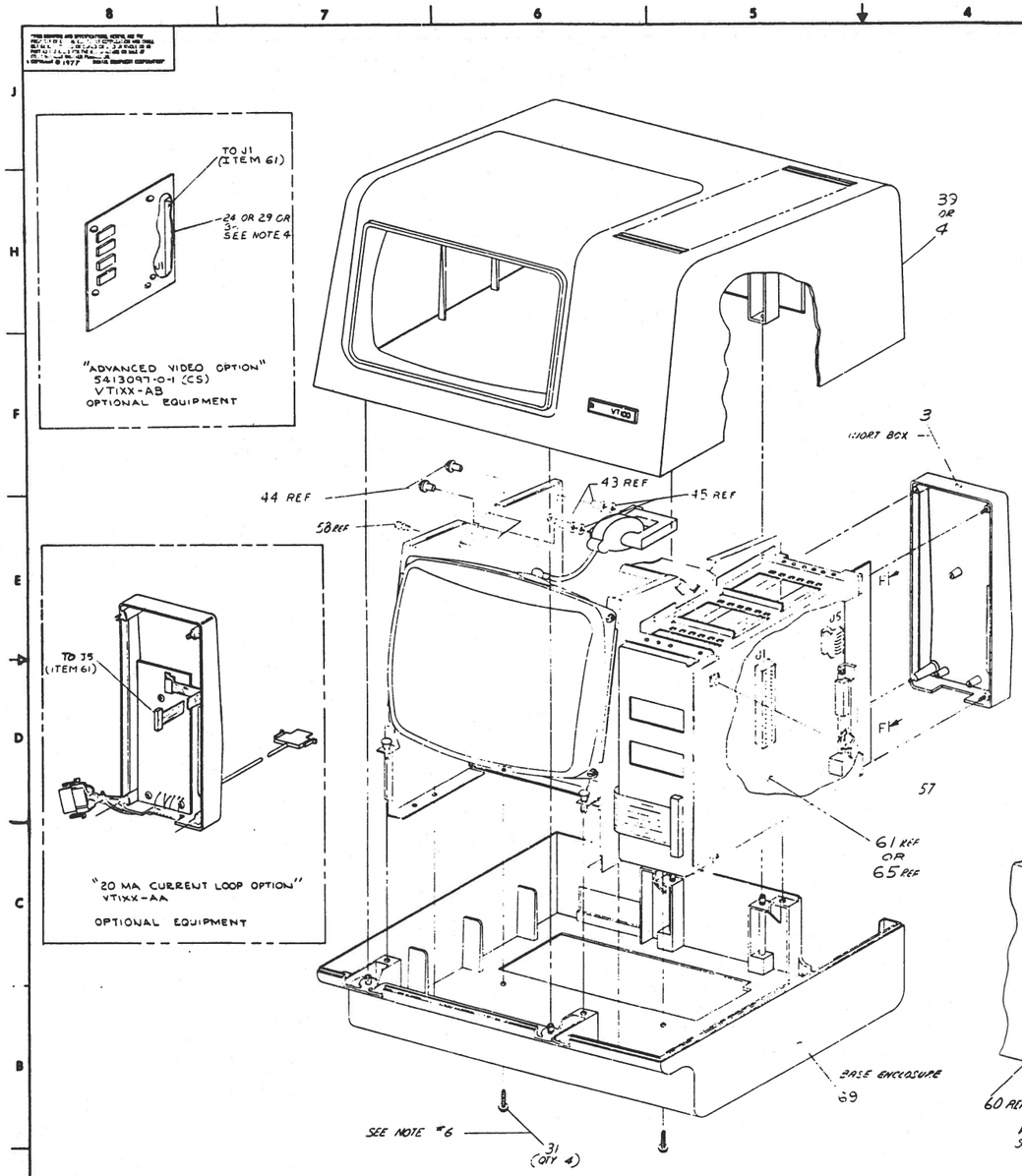

MODEL NUMBER	VARIATIONS	SERIAL LABEL INFORMATION: VOLTS	AMPS	PH	HZ	WATTS	WIRES
VTIØØ -AA	DBL KEYBD EIA 115V LINE CORD USA PLUG	120/220 240	2.5 / 1.3		50/60	300 MAX	
VTIØØ -AB	DBL KEYBD EIA 230V LINE CORD 20A PLUG	↓	↓		↓	↓	
VTIØØ -NA	VTIØØ-AA WITH DEC FORM KEY CAPS						
VTIØØ -NB	VTIØØ-AB WITH DEC FORM KEY CAPS						
VTIØØ -WA	VTIØØ-AA WITH WORD PROCESSING KEYCAPS						
VTIØØ -WB	VTIØØ-AB WITH WORD PROCESSING KEYCAPS						
VTIØØ -WC	VTIØØ WITH AVO, FR. CANADIAN WP KEYCAPS. FOREIGN LANGUAGE ROMS, & 120V PLUG						
VTIØØ -WD	VTIØØ WITH AVO, FR. CANADIAN WP KEYCAPS, FOREIGN LANGUAGE ROMS, & 230V 20A PLUG.						
VTIØØ -WE	VTIØØ WITH AVO, FRENCH WP KEYCAPS. FOREIGN LANGUAGE ROMS AND 120V PLUG.						
VTIØØ -WF	VTIØØ WITH AVO, FRENCH WP KEYCAPS, FOREIGN LANGUAGE ROMS, & 230V 20A PLUG.						
VTIØØ -WG	VTIØØ WITH AVO, DUTCH KEYCAPS, FOREIGN LANGUAGE ROMS, AND 120V PLUG.						
VTIØØ -WH	VTIØØ WITH AVO, DUTCH KEYCAPS, FOREIGN LANGUAGE ROMS, & 230V 20A PLUG.						
VTIØØ -WJ	VTIØØ WITH AVO, GERMAN KEYCAPS, FOREIGN LANGUAGE ROMS, & 120 V PLUG.						
VTIØØ -WK	VTIØØ WITH AVO, GERMAN KEYCAPS, FOREIGN LANGUAGE ROMS, & 230V 20A PLUG.						
VTIØØ -WY	VTIØØ WITH AVO, WP KEYCAPS, FOREIGN LANGUAGE ROMS, AND 120 V PLUG.						
VTIØØ -WZ	VTIØØ WITH AVO, WP KEYCAPS, FOREIGN LANGUAGE ROMS, AND 230V 20A PLUG.						
VTIØØ -LA	VTIØØ-AA WITH P40 TUBE AND BONDED FACE PLATE						
VTIØØ -LB	VTIØØ-AB WITH P40 TUBE AND BONDED FACE PLATE						
VTIØØ -PA	(PRIVATE BRAND) VTIØØ-AA EXCEPT DARK GREY TRIM. 120V						
VTIØØ -PB	(PRIVATE BRAND) VTIØØ-AB EXCEPT DARK GREY TRIM. 230V/240V						
VTIØØ -PC	(PRIVATE BRAND) VTIØØ-PA WITHOUT ELECTRONICS 120V						
VTIØØ -PD	(PRIVATE BRAND) VTIØØ-PB WITHOUT ELECTRONICS 240V						
VTIØØ -PE	(PRIVATE BRAND) VTIØØ-PA WITHOUT ELECT. & NO KYBD 120V						
VTIØØ -PF	(PRIVATE BRAND) VTIØØ-PB WITHOUT ELECT. & NO KYBD 240V						
VTIØØ -BA	KIT OF 4 VTIØØ-AA						
VTIØØ -BB	KIT OF 4 VTIØØ-AB						
VTIØØ -CA	KIT OF 8 VTIØØ-AA						
VTIØØ -CB	KIT OF 8 VTIØØ-AB						
VTIØØ -DA	KIT OF 16 VTIØØ-AA	↓	↓		↓	↓	
VTIØØ -DB	KIT OF 16 VTIØØ-AB	120/220 240	2.5 / 1.3		50/60	300MAX	

QUANTITY & VARIATION

SEE PARTS LIST

TITLE VTIØØ UNIT ASSY

SIZE B CODE UA DWG NO. VTIØØ-0-Ø REV A J

SCALE 1/2 SHEET 2 OF 3

MLS

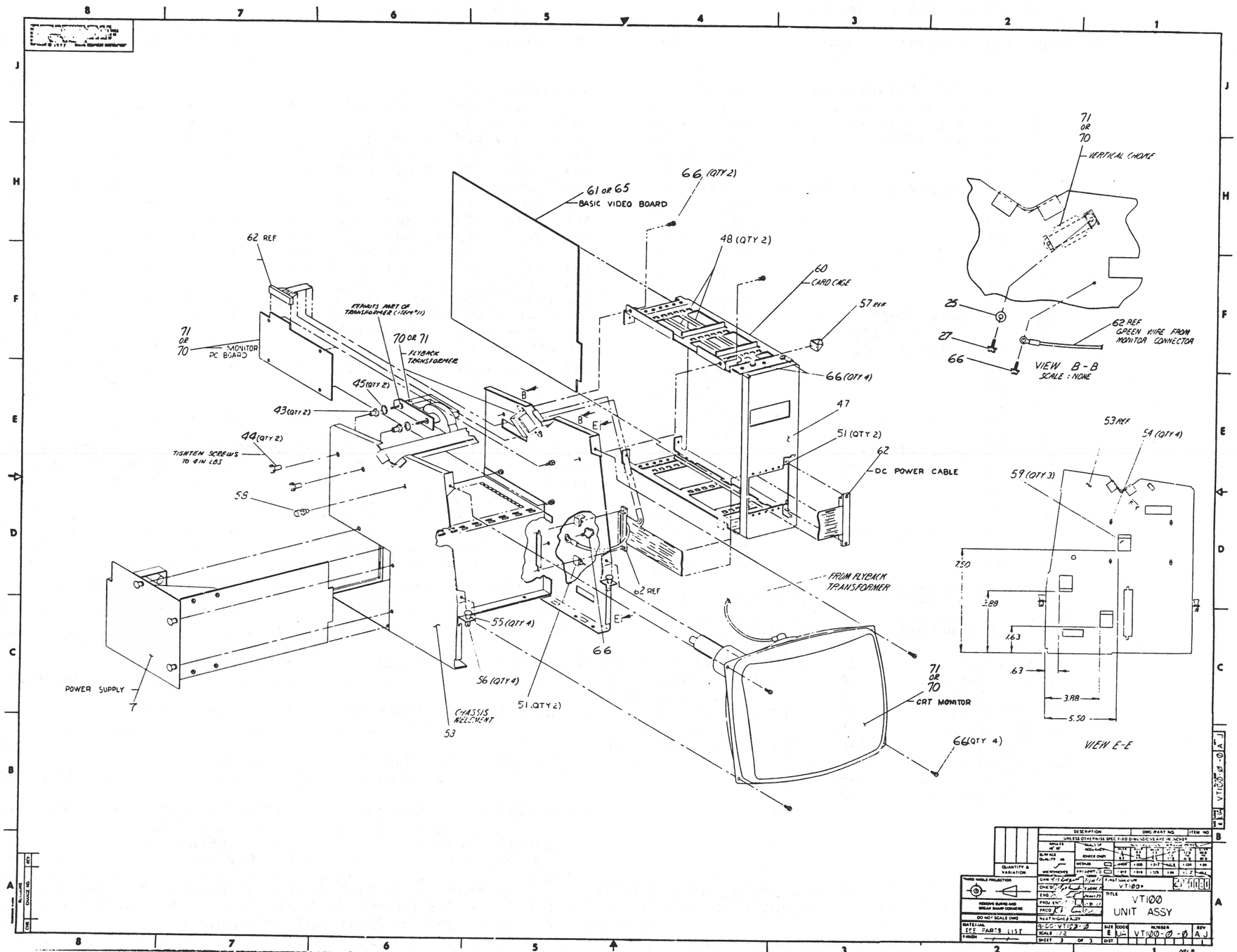
61 OR 65
BASIC VIDEO BOARD
66 (QTY 2)
48 (QTY 2)
60
CARD CAGE
57 REF
62 REF
71 OR 70
MONITOR PC BOARD
FORMS PART OF TRANSFORMER (ITEM 11)
70 OR 71
FLYBACK TRANSFORMER
45 (QTY 2)
43 (QTY 2)
44 (QTY 2)
TIGHTEN SCREWS TO 4 IN LBS
58
66 (QTY 4)
47
51 (QTY 2)
62
DC POWER CABLE
FROM FLYBACK TRANSFORMER
62 REF
55 (QTY 4)
66
56 (QTY 4)
51 (QTY 2)
CHASSIS WELDMENT
53
POWER SUPPLY
71 OR 70
CRT MONITOR
66 (QTY 4)
71 OR 70
VERTICAL CHOKE
25
27
66
62 REF
GREEN WIRE FROM MONITOR CONNECTOR
VIEW B-B
SCALE : NONE
53 REF
54 (QTY 4)
59 (QTY 3)
7.50
3.88
1.63
.63
3.88
5.50
VIEW E-E
VT100
UNIT ASSY
VT100-0-0
A J
SHEET 3 OF 3

AUTOMATED BY PRTLST.3P(44)

P A R T S L I S T

LINE	ITEM	DOCUMENT NUMBER	PART NUMBER	DESCRIPTION	QUANTITY PER VARIATION AA	AB	NA	NB	WA	WB	WC	WD	WE	WF	WG	WH
1	1	D-UA-7014653-0-0	7014653-00	KEYBOARD ASSY	1	1	-	-	-	-	-	-	-	-	-	-
2	2	E-IA-7014980-0-0	7014980-00	*** THIS ITEM IS NOT USED ***	-	-	-	-	-	-	-	-	-	-	-	-
3	3	D-IA-7014976-0-0	7014976-00	WORT BOX ASSY	1	1	1	1	1	1	1	1	1	1	1	1
4	4	D-IA-7014974-0-0	7014974-00	ENCLOSURE, CRT TOP ASSY	1	1	1	1	1	1	1	1	1	1	1	1
5	5		7014975-00	*** THIS ITEM IS NOT USED ***	-	-	-	-	-	-	-	-	-	-	-	-
6	6		7014977-00	*** THIS ITEM IS NOT USED ***	-	-	-	-	-	-	-	-	-	-	-	-
7	7	D-AD-7014979-0-0	7014979-00	POWER SUPPLY ASSY	1	1	1	1	1	1	1	1	1	1	1	1
8	8		7014978-01	*** THIS ITEM IS NOT USED ***	-	-	-	-	-	-	-	-	-	-	-	-
9	9		5413009-00	*** THIS ITEM IS NOT USED ***	-	-	-	-	-	-	-	-	-	-	-	-
10	10		7419836-00	*** THIS ITEM IS NOT USED ***	-	-	-	-	-	-	-	-	-	-	-	-
11	11		3016080-00	*** THIS ITEM IS NOT USED ***	-	-	-	-	-	-	-	-	-	-	-	-
12	12		9010007-00	*** THIS ITEM IS NOT USED ***	-	-	-	-	-	-	-	-	-	-	-	-
13	13		9009967-00	*** THIS ITEM IS NOT USED ***	-	-	-	-	-	-	-	-	-	-	-	-
14	14		3615680-00	LABEL,ADHESIVE BACK,SWITCH POSIT	1	1	1	1	1	1	1	1	1	1	1	1
15	15	A-PS-1700083-0-0	1700083-09	PWR CORD,TERM. 75IN,18-3,125V 10	1	-	1	-	1	-	1	-	1	-	1	-
16	16	A-PS-1700083-0-0	1700083-10	PWR CORD,TERM. 75IN,18-3,250V 6	-	1	-	1	-	1	-	1	-	1	-	1
17	17	D-UA-7014653-0-0	7014653-02	KEYBOARD ASSY.	-	-	1	1	-	-	-	-	-	-	-	-
18	18		7414213-00	*** THIS ITEM IS NOT USED ***	-	-	-	-	-	-	-	-	-	-	-	-
19	19		3613210-01	*** THIS ITEM IS NOT USED ***	-	-	-	-	-	-	-	-	-	-	-	-
20	20		3613210-02	*** THIS ITEM IS NOT USED ***	-	-	-	-	-	-	-	-	-	-	-	-
21	21		3613211-01	*** THIS ITEM IS NOT USED ***	-	-	-	-	-	-	-	-	-	-	-	-
22	22		3700324-00	INSTR PKG DISPLAY VT100	1	1	1	1	1	1	1	1	1	1	1	1
23	23	E-UA-VT1XX-AA-0	VT1XX-AA	VT100 20MA CURRENT LOOP OPTION W	REF	REF	REF	REF	REF	REF	REF	REF	REF	REF	REF	REF
24	24	A-PL-VT1XX-AB-0	VT1XX-AB	ADVANCED VIDEO OPTION FOR VT100	REF	REF	REF	REF	REF	REF	-	-	-	-	-	-
25	25		9006659-00	WASHER,FLAT STEEL	1	1	1	1	1	1	1	1	1	1	1	1
26	26		9007649-00	*** THIS ITEM IS NOT USED ***	-	-	-	-	-	-	-	-	-	-	-	-
27	27		9010112-00	SCREW,WASH HEX SLOT THD RL 6-	1	1	1	1	1	1	1	1	1	1	1	1
28	28	E-UA-7014653-0-0	7014653-03	KEYBOARD ASSY.	-	-	-	-	1	1	-	-	-	-	-	-
29	29		5413097-00	*** THIS ITEM IS NOT USED ***	-	-	-	-	-	-	-	-	-	-	-	-
30	30		9009313-01	SUPPORT,C.BD.,FLAME RET.,NATURAL	-	-	-	-	4	4	4	4	4	4	4	4

REVISION HISTORY			BASIC PART NO: VT100
ENG	ECO NUMBER	REV	SECTION A OF C
JD	VT100-ML040	Z	SECTION. VARIATION INDEX
GB	VT100-ML042	AA	[A] AA,AB,NA,NB,WA,WB,
GB	VT100-ML043	AB	WC,WD,WE,WF,WG,WH
GB	VT100-ML044	AC	[B] WJ,WK,WY,WZ,LA,LB,
GB	VT100-ML045	AD	PA,PB,PC,PD,PE,PF
GB	VT100-ML046	AE	[C] BA,BB,CA,CB,DA,DB
GB	VT100-ML047	AF	
AJ	VT100-ML048	AH	[D]
GB	VT100-ML049	AJ	
			[E]
			[F]

DRN: B. BLODGETT	DATE: 3-SEP-77	D I G I T A L
CHK'D: D. HEALY	DATE: 24-SEP-77	TITLE PARTS LIST VT100 UNIT ASSY.
DES.ENG.: E. WEDEKING	DATE: 26-JUN-78	
RESP.ENG.: G. DOUMANI	DATE: 26-JUN-78	DOCUMENT NUMBER
MFG.ENG.: K. HOFFMAN	DATE: 7-JUL-78	SIZE: K CODE: PL NUMBER: VT100-0-DBP REV: AJ
ASSEMBLY NUMBER: E-UA-VT100-0-0	TOP DOCUMENT NUMBER: #B-DD-VT100-0	FILE NAME: ML08AJ.PLS EDIT #: 19

"THIS DRAWING AND SPECIFICATIONS HEREIN, ARE THE PROPERTY OF DIGITAL EQUIPMENT CORPORATION AND SHALL NOT BE REPRODUCED OR COPIED OR USED IN WHOLE OR IN PART AS THE BASIS FOR THE MANUFACTURE OR SALE OF ITEMS WITHOUT WRITTEN PERMISSION.
COPYRIGHT (C) 1982, DIGITAL EQUIPMENT CORPORATION "

ML3

LINE	ITEM	DOCUMENT NUMBER	PART NUMBER	DESCRIPTION	QUANTITY PER VARIATION AA	AB	NA	NB	WA	WB	WC	WD	WE	WF	WG	WH
31	31		9010135-00	SCREW,TAP HEXWW SLOT THD RL 8-	4	4	4	4	4	4	4	4	4	4	4	4
32	32	E-UA-7014653-0-0	7014653-05	KEYBD ASSY FR CANADIAN WP KEYCAP	-	-	-	-	-	-	1	1	-	-	-	-
33	33	E-UA-7014653-0-0	7014653-06	KEYBD ASSY FRENCH + WP KEYCAPS	-	-	-	-	-	-	-	-	1	1	-	-
34	34	E-UA-7014653-0-0	7014653-07	KEYBD ASSY DUTCH WP KEYCAPS	-	-	-	-	-	-	-	-	-	-	1	1
35	35	E-UA-7014653-0-0	7014653-08	*** THIS ITEM IS NOT USED ***	-	-	-	-	-	-	-	-	-	-	-	-
36	36	D-UA-5413097-0-0	5413097-03	VT100 ADVANCED VIDEO	-	-	-	-	-	-	1	1	1	1	1	1
37	37		5413009-02	*** THIS ITEM IS NOT USED ***	-	-	-	-	-	-	-	-	-	-	-	-
38	38		3016080-53	*** THIS ITEM IS NOT USED ***	-	-	-	-	-	-	-	-	-	-	-	-
39	39	D-IA-7014974-0-0	7014974-02	*** THIS ITEM IS NOT USED ***	-	-	-	-	-	-	-	-	-	-	-	-
40	40	D-UA-7014653-0-0	7014653-10	*** THIS ITEM IS NOT USED ***	-	-	-	-	-	-	-	-	-	-	-	-
41	41	D-UA-7014653-0-0	7014653-09	*** THIS ITEM IS NOT USED ***	-	-	-	-	-	-	-	-	-	-	-	-
42	42		3616157-00	*** THIS ITEM IS NOT USED ***	-	-	-	-	-	-	-	-	-	-	-	-
43	43	B-IA-7423018-0-0	7423018-00	ISOLATION MOUNT.	2	2	2	2	2	2	2	2	2	2	2	2
44	44	B-MD-7423006-0-0	7423006-00	SCREW,HEX WASHER HD,4-40	2	2	2	2	2	2	2	2	2	2	2	2
45	45		9008193-00	WASHER,FLAT NYLON	2	2	2	2	2	2	2	2	2	2	2	2
46	46		7016624-00	*** THIS ITEM IS NOT USED ***	-	-	-	-	-	-	-	-	-	-	-	-
47	47	D-IA-7419469-0-0	7419469-00	STOP P.C. CARD	1	1	1	1	1	1	1	1	1	1	1	1
48	48		1212405-00	CARD GUIDE,NYLON	2	2	2	2	2	2	2	2	2	2	2	2
49	49	A-PS-3617544-0-0	3617544-00	LABEL,X-RAY RADIATION	1	1	1	1	1	1	1	1	1	1	1	1
50	50	SEE NOTE	3617674-01	LABEL,SERIAL & POWER W/UL & CSA	1	1	1	1	1	1	1	1	1	1	1	1
51	51		9010234-00	CLIP,CONN MTG. ZINCP	4	4	4	4	4	4	4	4	4	4	4	4
52	52	E-UA-5413097-0-0	5413097-01	ADVANCE VIDEO LA120	-	-	-	-	1	1	-	-	-	-	-	-
53	53	E-IA-7017434-0-DBU	7017434-00	CHASSIS WELDMENT	1	1	1	1	1	1	1	1	1	1	1	1
54	54		1217594-00	STANDOFF,PC BOARD MOUNTED -	4	4	4	4	4	4	4	4	4	4	4	4
55	55		9009964-00	PLUNGER, 5/16 DIA	4	4	4	4	4	4	4	4	4	4	4	4
56	56		9009966-01	GROMMET,SNAP-IN POLYCARBONAT	4	4	4	4	4	4	4	4	4	4	4	4
57	57		9009624-00	BUMPER,SQUARE ADH BACK RUBBER	1	1	1	1	1	1	1	1	1	1	1	1
58	58		1218041-00	BUMPER, W/STEM SBR	1	1	1	1	1	1	1	1	1	1	1	1
59	59		9009636-00	CLAMP, CABLE, FOR FLAT CABLE	3	3	3	3	3	3	3	3	3	3	3	3
60	60	E-MD-7423954-0-DBU	7423954-00	CARD CAGE	1	1	1	1	1	1	1	1	1	1	1	1
61	61	D-UA-5413009-0-0	5413009-03	VT100 BASIC VIDEO	1	1	1	1	1	1	-	-	-	-	-	-
62	62	D-IA-7014978-0-0	7014978-03	DC POWER CABLE VT100 FCC	1	1	1	1	1	1	1	1	1	1	1	1
63	63		3617880-03	LABEL,FCC CLASS A PERIPHERAL	1	1	1	1	1	1	1	1	1	1	1	1
64	64	B-IA-7017970-0-0	7017970-YA	CABLE GROUNDING 3.5	1	1	1	1	1	1	1	1	1	1	1	1
65	65	D-UA-5413009-0-0	5413009-05	VT100 BASIC VIDEO	-	-	-	-	-	-	1	1	1	1	1	1
66	66		9000049-08	SCREW,SEMS HEX SLOT 6-	12	12	12	12	12	12	12	12	12	12	12	12
67	67	SEE NOTE	3700324-01	PKG DISPLAY VT100	REF	REF	REF	REF	-	-	-	-	-	-	-	-
68	68	SEE NOTE	3700520-00	PKG. H9780-BA CAB	REF	REF	REF	REF	REF	REF	REF	REF	REF	REF	REF	REF
69	69	E-IA-7014980-0-0	7014980-04	BASE, ENCLOSURE ASSY	1	1	1	1	1	1	1	1	1	1	1	1
70	70	D-AD-7018349-0-0	7018349-01	MONITOR ASSY, CRT, DIRECT DRIVE	1	1	1	1	1	1	1	1	1	1	1	1
71	71	D-AD-7018349-0-0	7018349-05	*** THIS ITEM IS NOT USED ***	-	-	-	-	-	-	-	-	-	-	-	-
72	72	E-UA-VT100-0-0	VT100-AA	*** THIS ITEM IS NOT USED ***	-	-	-	-	-	-	-	-	-	-	-	-
73	73	E-UA-VT100-0-0	VT100-AB	*** THIS ITEM IS NOT USED ***	-	-	-	-	-	-	-	-	-	-	-	-
74	74		3617905-01	LABEL,WARNING 120V 60HZ	1	-	1	-	1	-	1	-	1	-	1	-
75	75		3617905-02	LABEL,WARNING 220-240V50HZ	-	1	-	1	-	1	-	1	-	1	-	1

DIGITAL	TITLE	SECTION	SIZE	CODE	DOCUMENT NUMBER	REV
	VT100 UNIT ASSY.	A OF C	K	FL	VT100-0-DBP	AJ

LINE ITEM	DOCUMENT NUMBER	PART NUMBER	DESCRIPTION	QUANTITY PER VARIATION AA	AB	NA	NB	WA	WB	WC	WD	WE	WF	WG	WH

76 NOTE: ALTERNATE SHIPPING CONTAINERS FOR USE WITH VARIATIONS AS INDICATED
77 NOTE: (LABEL, SERIAL NUMBER) 3617674-08 MAYBE USED AS ALTERNATE PART NUMBER TO ITEM #50 (3617674-01)

LINE	ITEM	DOCUMENT NUMBER	PART NUMBER	DESCRIPTION	QUANTITY PER VARIATION WJ	WK	WY	WZ	LA	LB	PA	PB	PC	PD	PE	PF
1	1	D-UA-7014653-0-0	7014653-00	KEYBOARD ASSY	-	-	-	-	1	1	-	-	-	-	-	-
2	2	E-IA-7014980-0-0	7014980-00	*** THIS ITEM IS NOT USED ***	-	-	-	-	-	-	-	-	-	-	-	-
3	3	D-IA-7014976-0-0	7014976-00	WORT BOX ASSY	1	1	1	1	1	1	1	1	1	1	1	1
4	4	D-IA-7014974-0-0	7014974-00	ENCLOSURE, CRT TOP ASSY	1	1	1	1	1	1	-	-	-	-	-	-
5	5		7014975-00	*** THIS ITEM IS NOT USED ***	-	-	-	-	-	-	-	-	-	-	-	-
6	6		7014977-00	*** THIS ITEM IS NOT USED ***	-	-	-	-	-	-	-	-	-	-	-	-
7	7	D-AD-7014979-0-0	7014979-00	POWER SUPPLY ASSY	1	1	1	1	1	1	1	1	1	1	1	1
8	8		7014978-01	*** THIS ITEM IS NOT USED ***	-	-	-	-	-	-	-	-	-	-	-	-
9	9		5413009-00	*** THIS ITEM IS NOT USED ***	-	-	-	-	-	-	-	-	-	-	-	-
10	10		7419836-00	*** THIS ITEM IS NOT USED ***	-	-	-	-	-	-	-	-	-	-	-	-
11	11		3016080-00	*** THIS ITEM IS NOT USED ***	-	-	-	-	-	-	-	-	-	-	-	-
12	12		9010007-00	*** THIS ITEM IS NOT USED ***	-	-	-	-	-	-	-	-	-	-	-	-
13	13		9009967-00	*** THIS ITEM IS NOT USED ***	-	-	-	-	-	-	-	-	-	-	-	-
14	14		3615680-00	LABEL,ADHESIVE BACK,SWITCH POSIT	1	1	1	1	1	1	1	1	1	1	1	1
15	15	A-PS-1700083-0-0	1700083-09	PWR CORD,TERM. 75IN,18-3,125V 10	1	-	1	-	1	-	1	-	1	-	1	-
16	16	A-PS-1700083-0-0	1700083-10	PWR CORD,TERM. 75IN,18-3,250V 6	-	1	-	1	-	1	-	1	-	1	-	1
17	17	D-UA-7014653-0-0	7014653-02	*** THIS ITEM IS NOT USED ***	-	-	-	-	-	-	-	-	-	-	-	-
18	18		7414213-00	*** THIS ITEM IS NOT USED ***	-	-	-	-	-	-	-	-	-	-	-	-
19	19		3613210-01	*** THIS ITEM IS NOT USED ***	-	-	-	-	-	-	-	-	-	-	-	-
20	20		3613210-02	*** THIS ITEM IS NOT USED ***	-	-	-	-	-	-	-	-	-	-	-	-
21	21		3613211-01	*** THIS ITEM IS NOT USED ***	-	-	-	-	-	-	-	-	-	-	-	-
22	22		3700324-00	INSTR PKG DISPLAY VT100	1	1	1	1	1	1	1	1	1	1	1	1
23	23	E-UA-VT1XX-AA-0	VT1XX-AA	VT100 20MA CURRENT LOOP OPTION W	REF	REF	REF	REF	REF	REF	REF	REF	-	-	-	-
24	24	A-PL-VT1XX-AB-0	VT1XX-AB	ADVANCED VIDEO OPTION FOR VT100	-	-	-	-	REF	REF	REF	REF	-	-	-	-
25	25		9006659-00	WASHER,FLAT STEEL	1	1	1	1	1	1	1	1	1	1	1	1
26	26		9007649-00	*** THIS ITEM IS NOT USED ***	-	-	-	-	-	-	-	-	-	-	-	-
27	27		9010112-00	SCREW,WASH HEX SLOT THD RL 6-	1	1	1	1	1	1	1	1	1	1	1	1
28	28	E-UA-7014653-0-0	7014653-03	KEYBOARD ASSY.	-	-	1	1	-	-	-	-	-	-	-	-
29	29		5413097-00	*** THIS ITEM IS NOT USED ***	-	-	-	-	-	-	-	-	-	-	-	-
30	30		9009313-01	SUPPORT,C.BD.,FLAME RET.,NATURAL	4	4	4	4	-	-	-	-	-	-	-	-

REVISION HISTORY			
ENG	ECO NUMBER	REV	
JD	VT100-ML040	Z	
GB	VT100-ML042	AA	
GB	VT100-ML043	AB	
GB	VT100-ML044	AC	
GB	VT100-ML045	AD	
GB	VT100-ML046	AE	
GB	VT100-ML047	AF	
AJ	VT100-ML048	AH	
GB	VT100-ML049	AJ	

BASIC PART NO: VT100

SECTION B OF C

SECTION. VARIATION INDEX
[A] AA,AB,NA,NB,WA,WB, WC,WD,WE,WF,WG,WH
[B] WJ,WK,WY,WZ,LA,LB, PA,PB,PC,PD,PE,PF
[C] BA,BB,CA,CB,DA,DB
[D]
[E]
[F]

DRN: B. BLODGETT — DATE: 3-SEP-77

CHK'D: D. HEALY — DATE: 24-SEP-77

DES.ENG.: E. WEDEKING — DATE: 26-JUN-78

RESP.ENG.: G. DOUMANI — DATE: 26-JUN-78

MFG.ENG.: K. HOFFMAN — DATE: 7-JUL-78

D I G I T A L

TITLE PARTS LIST
VT100 UNIT ASSY.

DOCUMENT NUMBER			
SIZE	CODE	NUMBER	REV
K	PL	VT100-0-DBP	AJ

ASSEMBLY NUMBER: E-UA-VT100-0-0

TOP DOCUMENT NUMBER: *B-DD-VT100-0

FILE NAME: ML08AJ.PLS

EDIT #: 19

"THIS DRAWING AND SPECIFICATIONS HEREIN, ARE THE PROPERTY OF DIGITAL EQUIPMENT CORPORATION AND SHALL NOT BE REPRODUCED OR COPIED OR USED IN WHOLE OR IN PART AS THE BASIS FOR THE MANUFACTURE OR SALE OF ITEMS WITHOUT WRITTEN PERMISSION.
COPYRIGHT (C) 1982, DIGITAL EQUIPMENT CORPORATION "

LINE	ITEM	DOCUMENT NUMBER	PART NUMBER	DESCRIPTION	QUANTITY PER VARIATION WJ	WK	WY	WZ	LA	LB	PA	PB	PC	PD	PE	PF
31	31		9010135-00	SCREW,TAP HEXWW SLOT THD RL 8-	4	4	4	4	4	4	4	4	4	4	4	4
32	32	E-UA-7014653-0-0	7014653-05	*** THIS ITEM IS NOT USED ***	-	-	-	-	-	-	-	-	-	-	-	-
33	33	E-UA-7014653-0-0	7014653-06	*** THIS ITEM IS NOT USED ***	-	-	-	-	-	-	-	-	-	-	-	-
34	34	E-UA-7014653-0-0	7014653-07	*** THIS ITEM IS NOT USED ***	-	-	-	-	-	-	-	-	-	-	-	-
35	35	E-UA-7014653-0-0	7014653-08	KEYBD ASSY GERMAN WP KEYCAPS	1	1	-	-	-	-	-	-	-	-	-	-
36	36	D-UA-5413097-0-0	5413097-03	VT100 ADVANCED VIDEO	1	1	1	1	-	-	-	-	-	-	-	-
37	37		5413009-02	*** THIS ITEM IS NOT USED ***	-	-	-	-	-	-	-	-	-	-	-	-
38	38		3016080-53	*** THIS ITEM IS NOT USED ***	-	-	-	-	-	-	-	-	-	-	-	-
39	39	D-IA-7014974-0-0	7014974-02	ENCLOSURE CRT TOP ASSY W/DK. GRA	-	-	-	-	-	-	1	1	1	1	1	1
40	40	D-UA-7014653-0-0	7014653-10	KEYBD ENCLOSURE ASSY NO KEYBD	-	-	-	-	-	-	-	-	-	-	1	1
41	41	D-UA-7014653-0-0	7014653-09	KEYBD/KEYCAP ASSY DARK GRAY	-	-	-	-	-	-	1	1	1	1	-	-
42	42		3616157-00	*** THIS ITEM IS NOT USED ***	-	-	-	-	-	-	-	-	-	-	-	-
43	43	B-IA-7423018-0-0	7423018-00	ISOLATION MOUNT.	2	2	2	2	2	2	2	2	2	2	2	2
44	44	B-MD-7423006-0-0	7423006-00	SCREW,HEX WASHER HD,4-40	2	2	2	2	2	2	2	2	2	2	2	2
45	45		9008193-00	WASHER,FLAT NYLON	2	2	2	2	2	2	2	2	2	2	2	2
46	46		7016624-00	*** THIS ITEM IS NOT USED ***	-	-	-	-	-	-	-	-	-	-	-	-
47	47	D-IA-7419469-0-0	7419469-00	STOP P.C. CARD	1	1	1	1	1	1	1	1	1	1	1	1
48	48		1212405-00	CARD GUIDE,NYLON	2	2	2	2	2	2	2	2	2	2	2	2
49	49	A-PS-3617544-0-0	3617544-00	LABEL,X-RAY RADIATION	1	1	1	1	1	1	1	1	1	1	1	1
50	50	SEE NOTE	3617674-01	LABEL,SERIAL & POWER W/UL & CSA	1	1	1	1	1	1	1	1	1	1	1	1
51	51		9010234-00	CLIP,CONN MTG. ZINCP	4	4	4	4	4	4	4	4	4	4	4	4
52	52	E-UA-5413097-0-0	5413097-01	*** THIS ITEM IS NOT USED ***	-	-	-	-	-	-	-	-	-	-	-	-
53	53	E-IA-7017434-0-DBU	7017434-00	CHASSIS WELDMENT	1	1	1	1	1	1	1	1	1	1	1	1
54	54		1217594-00	STANDOFF,PC BOARD MOUNTED -	4	4	4	4	4	4	4	4	4	4	4	4
55	55		9009964-00	PLUNGER, 5/16 DIA	4	4	4	4	4	4	4	4	4	4	4	4
56	56		9009966-01	GROMMET,SNAP-IN POLYCARBONAT	4	4	4	4	4	4	4	4	4	4	4	4
57	57		9009624-00	BUMPER,SQUARE ADH BACK RUBBER	1	1	1	1	1	1	1	1	1	1	1	1
58	58		1218041-00	BUMPER, W/STEM SBR	1	1	1	1	1	1	1	1	1	1	1	1
59	59		9009636-00	CLAMP, CABLE, FOR FLAT CABLE	3	3	3	3	3	3	3	3	3	3	3	3
60	60	E-MD-7423954-0-DBU	7423954-00	CARD CAGE	1	1	1	1	1	1	1	1	1	1	1	1
61	61	D-UA-5413009-0-0	5413009-03	VT100 BASIC VIDEO	-	-	-	-	1	1	1	1	-	-	-	-
62	62	D-IA-7014978-0-0	7014978-03	DC POWER CABLE VT100 FCC	1	1	1	1	1	1	1	1	1	1	1	1
63	63		3617880-03	LABEL,FCC CLASS A PERIPHERAL	1	1	1	1	1	1	1	1	-	1	1	1
64	64	B-IA-7017970-0-0	7017970-YA	CABLE GROUNDING 3.5	1	1	1	1	1	1	1	1	-	-	-	-
65	65	D-UA-5413009-0-0	5413009-05	VT100 BASIC VIDEO	1	1	1	1	-	-	-	-	-	-	-	-
66	66		9000049-08	SCREW,SEMS HEX SLOT 6-	12	12	12	12	12	12	12	12	12	12	12	12
67	67	SEE NOTE	3700324-01	*** THIS ITEM IS NOT USED ***	-	-	-	-	-	-	-	-	-	-	-	-
68	68	SEE NOTE	3700520-00	PKG. H9780-BA CAB	REF	REF	REF	REF	REF	REF	REF	REF	REF	REF	REF	REF
69	69	E-IA-7014980-0-0	7014980-04	BASE, ENCLOSURE ASSY	1	1	1	1	1	1	1	1	1	1	1	1
70	70	D-AD-7018349-0-0	7018349-01	MONITOR ASSY, CRT, DIRECT DRIVE	1	1	1	1	-	-	1	1	1	1	1	1
71	71	D-AD-7018349-0-0	7018349-05	MONITOR ASSY, CRT, DIRECT DRIVE	-	-	-	-	1	1	-	-	-	-	-	-
72	72	E-UA-VT100-0-0	VT100-AA	*** THIS ITEM IS NOT USED ***	-	-	-	-	-	-	-	-	-	-	-	-
73	73	E-UA-VT100-0-0	VT100-AB	*** THIS ITEM IS NOT USED ***	-	-	-	-	-	-	-	-	-	-	-	-
74	74		3617905-01	LABEL,WARNING 120V 60HZ	1	-	1	-	1	-	1	-	1	-	1	-
75	75		3617905-02	LABEL,WARNING 220-240V50HZ	-	1	-	1	-	1	-	1	-	1	-	1

D	I	G	I	T	A	L	TITLE	SECTION B OF C	SIZE	CODE	DOCUMENT NUMBER	REV
							VT100 UNIT ASSY.		K	PL	VT100-0-DBP	AJ

ML3

LINE ITEM	DOCUMENT NUMBER	PART NUMBER	DESCRIPTION	QUANTITY PER VARIATION WJ	WK	WY	WZ	LA	LB	PA	PB	PC	PD	PE	PF

76 NOTE: ALTERNATE SHIPPING CONTAINERS FOR USE WITH VARIATIONS AS INDICATED

77 NOTE: (LABEL, SERIAL NUMBER) 3617674-08 MAYBE USED AS ALTERNATE PART NUMBER TO ITEM #50 (3617674-01)

P A R T S L I S T

LINE	ITEM	DOCUMENT NUMBER	PART NUMBER	DESCRIPTION	QUANTITY PER VARIATION BA	BB	CA	CB	DA	DB
1	1	D-UA-7014653-0-0	7014653-00	*** THIS ITEM IS NOT USED ***	-	-	-	-	-	-
2	2	E-IA-7014980-0-0	7014980-00	*** THIS ITEM IS NOT USED ***	-	-	-	-	-	-
3	3	D-IA-7014976-0-0	7014976-00	*** THIS ITEM IS NOT USED ***	-	-	-	-	-	-
4	4	D-IA-7014974-0-0	7014974-00	*** THIS ITEM IS NOT USED ***	-	-	-	-	-	-
5	5		7014975-00	*** THIS ITEM IS NOT USED ***	-	-	-	-	-	-
6	6		7014977-00	*** THIS ITEM IS NOT USED ***	-	-	-	-	-	-
7	7	D-AD-7014979-0-0	7014979-00	*** THIS ITEM IS NOT USED ***	-	-	-	-	-	-
8	8		7014978-01	*** THIS ITEM IS NOT USED ***	-	-	-	-	-	-
9	9		5413009-00	*** THIS ITEM IS NOT USED ***	-	-	-	-	-	-
10	10		7419836-00	*** THIS ITEM IS NOT USED ***	-	-	-	-	-	-
11	11		3016080-00	*** THIS ITEM IS NOT USED ***	-	-	-	-	-	-
12	12		9010007-00	*** THIS ITEM IS NOT USED ***	-	-	-	-	-	-
13	13		9009967-00	*** THIS ITEM IS NOT USED ***	-	-	-	-	-	-
14	14		3615680-00	*** THIS ITEM IS NOT USED ***	-	-	-	-	-	-
15	15	A-PS-1700083-0-0	1700083-09	*** THIS ITEM IS NOT USED ***	-	-	-	-	-	-
16	16	A-PS-1700083-0-0	1700083-10	*** THIS ITEM IS NOT USED ***	-	-	-	-	-	-
17	17	D-UA-7014653-0-0	7014653-02	*** THIS ITEM IS NOT USED ***	-	-	-	-	-	-
18	18		7414213-00	*** THIS ITEM IS NOT USED ***	-	-	-	-	-	-
19	19		3613210-01	*** THIS ITEM IS NOT USED ***	-	-	-	-	-	-
20	20		3613210-02	*** THIS ITEM IS NOT USED ***	-	-	-	-	-	-
21	21		3613211-01	*** THIS ITEM IS NOT USED ***	-	-	-	-	-	-
22	22		3700324-00	*** THIS ITEM IS NOT USED ***	-	-	-	-	-	-
23	23	E-UA-VT1XX-AA-0	VT1XX-AA	*** THIS ITEM IS NOT USED ***	-	-	-	-	-	-
24	24	A-PL-VT1XX-AB-0	VT1XX-AB	*** THIS ITEM IS NOT USED ***	-	-	-	-	-	-
25	25		9006659-00	*** THIS ITEM IS NOT USED ***	-	-	-	-	-	-
26	26		9007649-00	*** THIS ITEM IS NOT USED ***	-	-	-	-	-	-
27	27		9010112-00	*** THIS ITEM IS NOT USED ***	-	-	-	-	-	-
28	28	E-UA-7014653-0-0	7014653-03	*** THIS ITEM IS NOT USED ***	-	-	-	-	-	-
29	29		5413097-00	*** THIS ITEM IS NOT USED ***	-	-	-	-	-	-
30	30		9009313-01	*** THIS ITEM IS NOT USED ***	-	-	-	-	-	-

REVISION HISTORY			BASIC PART NO: VT100											
ENG	ECO NUMBER	REV	SECTION C OF C	DRN: B. BLODGETT	DATE: 3-SEP-77	D	I	G	I	T	A	L
JD	VT100-ML040	Z	SECTION. VARIATION INDEX	CHK'D: D. HEALY	DATE: 24-SEP-77	TITLE PARTS LIST						
GB	VT100-ML042	AA	[A] AA,AB,NA,NB,WA,WB,			VT100 UNIT ASSY.						
GB	VT100-ML043	AB	WC,WD,WE,WF,WG,WH									
GB	VT100-ML044	AC	[B] WJ,WK,WY,WZ,LA,LB,	DES.ENG.: E. WEDEKING	DATE: 26-JUN-78							
GB	VT100-ML045	AD	PA,PB,PC,PD,PE,PF									
GB	VT100-ML046	AE	[C] BA,BB,CA,CB,DA,DB			DOCUMENT NUMBER						
GB	VT100-ML047	AF		RESP.ENG.: G. DOUMANI	DATE: 26-JUN-78							
AJ	VT100-ML048	AH	[D]			SIZE	CODE	NUMBER	REV			
GB	VT100-ML049	AJ										
			[E]	MFG.ENG.: K. HOFFMAN	DATE: 7-JUL-78	K	PL	VT100-0-DBP	AJ			
			[F]	ASSEMBLY NUMBER:	TOP DOCUMENT NUMBER:	FILE NAME:			EDIT #			
				E-UA-VT100-0-0	B-DD-VT100-0	ML08AJ.PLS			19			

"THIS DRAWING AND SPECIFICATIONS HEREIN, ARE THE PROPERTY OF DIGITAL EQUIPMENT CORPORATION AND SHALL NOT BE REPRODUCED OR COPIED OR USED IN WHOLE OR IN PART AS THE BASIS FOR THE MANUFACTURE OR SALE OF ITEMS WITHOUT WRITTEN PERMISSION.
COPYRIGHT (C) 1982, DIGITAL EQUIPMENT CORPORATION "

P A R T S L I S T

LINE	ITEM	DOCUMENT NUMBER	PART NUMBER	DESCRIPTION	QUANTITY PER VARIATION BA	BB	CA	CB	DA	DB
31	31		9010135-00	*** THIS ITEM IS NOT USED ***	-	-	-	-	-	-
32	32	E-UA-7014653-0-0	7014653-05	*** THIS ITEM IS NOT USED ***	-	-	-	-	-	-
33	33	E-UA-7014653-0-0	7014653-06	*** THIS ITEM IS NOT USED ***	-	-	-	-	-	-
34	34	E-UA-7014653-0-0	7014653-07	*** THIS ITEM IS NOT USED ***	-	-	-	-	-	-
35	35	E-UA-7014653-0-0	7014653-08	*** THIS ITEM IS NOT USED ***	-	-	-	-	-	-
36	36	D-UA-5413097-0-0	5413097-03	*** THIS ITEM IS NOT USED ***	-	-	-	-	-	-
37	37		5413009-02	*** THIS ITEM IS NOT USED ***	-	-	-	-	-	-
38	38		3016080-53	*** THIS ITEM IS NOT USED ***	-	-	-	-	-	-
39	39	D-IA-7014974-0-0	7014974-02	*** THIS ITEM IS NOT USED ***	-	-	-	-	-	-
40	40	D-UA-7014653-0-0	7014653-10	*** THIS ITEM IS NOT USED ***	-	-	-	-	-	-
41	41	D-UA-7014653-0-0	7014653-09	*** THIS ITEM IS NOT USED ***	-	-	-	-	-	-
42	42		3616157-00	*** THIS ITEM IS NOT USED ***	-	-	-	-	-	-
43	43	B-IA-7423018-0-0	7423018-00	*** THIS ITEM IS NOT USED ***	-	-	-	-	-	-
44	44	B-MD-7423006-0-0	7423006-00	*** THIS ITEM IS NOT USED ***	-	-	-	-	-	-
45	45		9008193-00	*** THIS ITEM IS NOT USED ***	-	-	-	-	-	-
46	46		7016624-00	*** THIS ITEM IS NOT USED ***	-	-	-	-	-	-
47	47	D-IA-7419469-0-0	7419469-00	*** THIS ITEM IS NOT USED ***	-	-	-	-	-	-
48	48		1212405-00	*** THIS ITEM IS NOT USED ***	-	-	-	-	-	-
49	49	A-PS-3617544-0-0	3617544-00	*** THIS ITEM IS NOT USED ***	-	-	-	-	-	-
50	50	SEE NOTE	3617674-01	*** THIS ITEM IS NOT USED ***	-	-	-	-	-	-
51	51		9010234-00	*** THIS ITEM IS NOT USED ***	-	-	-	-	-	-
52	52	E-UA-5413097-0-0	5413097-01	*** THIS ITEM IS NOT USED ***	-	-	-	-	-	-
53	53	E-IA-7017434-0-DBU	7017434-00	*** THIS ITEM IS NOT USED ***	-	-	-	-	-	-
54	54		1217594-00	*** THIS ITEM IS NOT USED ***	-	-	-	-	-	-
55	55		9009964-00	*** THIS ITEM IS NOT USED ***	-	-	-	-	-	-
56	56		9009966-01	*** THIS ITEM IS NOT USED ***	-	-	-	-	-	-
57	57		9009624-00	*** THIS ITEM IS NOT USED ***	-	-	-	-	-	-
58	58		1218041-00	*** THIS ITEM IS NOT USED ***	-	-	-	-	-	-
59	59		9009636-00	*** THIS ITEM IS NOT USED ***	-	-	-	-	-	-
60	60	E-MD-7423954-0-DBU	7423954-00	*** THIS ITEM IS NOT USED ***	-	-	-	-	-	-
61	61	D-UA-5413009-0-0	5413009-03	*** THIS ITEM IS NOT USED ***	-	-	-	-	-	-
62	62	D-IA-7014978-0-0	7014978-03	*** THIS ITEM IS NOT USED ***	-	-	-	-	-	-
63	63		3617880-03	*** THIS ITEM IS NOT USED ***	-	-	-	-	-	-
64	64	B-IA-7017970-0-0	7017970-YA	*** THIS ITEM IS NOT USED ***	-	-	-	-	-	-
65	65	D-UA-5413009-0-0	5413009-05	*** THIS ITEM IS NOT USED ***	-	-	-	-	-	-
66	66		9000049-08	*** THIS ITEM IS NOT USED ***	-	-	-	-	-	-
67	67	SEE NOTE	3700324-01	*** THIS ITEM IS NOT USED ***	-	-	-	-	-	-
68	68	SEE NOTE	3700520-00	*** THIS ITEM IS NOT USED ***	-	-	-	-	-	-
69	69	E-IA-7014980-0-0	7014980-04	*** THIS ITEM IS NOT USED ***	-	-	-	-	-	-
70	70	D-AD-7018349-0-0	7018349-01	*** THIS ITEM IS NOT USED ***	-	-	-	-	-	-
71	71	D-AD-7018349-0-0	7018349-05	*** THIS ITEM IS NOT USED ***	-	-	-	-	-	-
72	72	E-UA-VT100-0-0	VT100-AA	VT100-A W 120V USA LINE CORD 170	4	-	8	-	16	-
73	73	E-UA-VT100-0-0	VT100-AB	VT100-A W 240V USA LINE CORD 170	-	4	-	8	-	16
74	74		3617905-01	*** THIS ITEM IS NOT USED ***	-	-	-	-	-	-
75	75		3617905-02	*** THIS ITEM IS NOT USED ***	-	-	-	-	-	-

D	I	G	I	T	A	L	TITLE	SIZE	CODE	DOCUMENT NUMBER	REV
							VT100 UNIT ASSY. SECTION C OF C	K	PL	VT100-0-DBP	AJ

LINE	ITEM	DOCUMENT NUMBER	PART NUMBER	DESCRIPTION	QUANTITY PER VARIATION BA	BB	CA	CB	DA	DB
76	NOTE:	ALTERNATE SHIPPING CONTAINERS FOR USE WITH VARIATIONS AS INDICATED								
77	NOTE:	(LABEL, SERIAL NUMBER) 3617674-08 MAYBE USED AS ALTERNATE PART NUMBER TO ITEM #50 (3617674-01)								

REWORK INSTRUCTIONS
1. ADD A CAPACITOR C61 (ITEM 125) FROM E32 PIN 6 TO E32 PIN 8
DETAIL A
DETAIL B
L2 1.5 TURNS 22 AWG BUSS WIRE
L3 + L10 2.5 TURNS 22 AWG BUSS WIRE
1044 REF. 26.518 MM
1055 REF. 26.797 MM
SEE DETAIL B AND NOTE 3
SEE DETAIL A AND NOTE 3
SEE NOTE 1
digital
TITLE VT102 PANC VIDEO
SYSTEM NUMBER 54-13-9323-C

AUTOMATED BY PRTLST.1D(11)

P A R T S L I S T

LINE	ITEM	DOCUMENT NUMBER	PART NUMBER	DESCRIPTION	QTY PER VARIATION 03	04	05	99	REFERENCE DESIGNATOR
1	1	D-MD-5013008-0-0	5013008-00	VT100 BASIC VIDEO	1	1	1	1	
2	2		1000005-00	6.8 MMF 100V 5%200PPM MICA	1	1	1	1	C9
3	3		1000014-00	68.0 MMF 100V 5%200PPM MICA	1	1	1	1	C11
4	4		1000016-00	100.0 MMF 100V 5%200PPM MICA	2	2	2	2	C21,C54
5	5		1000076-00	39 MFD 10V 10% S.TANT	1	1	1	1	C10
6	7		1017472-00	10 MFD 35V +50-10% AL EL	3	3	3	3	C1,C2,C3
7	8		1010274-01	.22 MFD 50V +80-20% Z5U CER	13	13	13	13	C4-C6,C14,C15,C27-C29,C44,C45,
								CONT	C55,C56,C59
8	9		1012784-00	.047 MFD 50V +80-20% CER	25	25	25	25	C7,C8,C13,C18,C19,C22,C24,C25,
								CONT	C30-C43,C48-C50
9	10		1013466-12	2200.0 MMF 50V 10% X7R CER	1	1	1	1	C26
10	11		1100114-00	D 664 QS\75PCB PIV= 25V SP	11	11	11	11	D4-D8,D11-D16
11	12		1105796-00	1N 4004 PIV=400 I= 1A D041 SP	2	2	2	2	D9,D10
12	13		1109502-03	1N 4742A VZ= 12.0 5% 1W	1	1	1	1	D3
13	14		1110994-00	1N 751A VZ= 5.1 5% .40W	1	1	1	1	D1
14	15		1114974-00	1N 4741A VZ= 11.0 5% 1W	1	1	1	1	D2
15	16		1215006-06	SKT,IC 24PIN DIP TIN SOLD	5	5	5	5	XE9,XE40,XE45,XE52,XE56
16	17		1211666-00	SKT,IC 18PIN DIP GOLD SOLD	1	1	1	1	J2
17	18		1214063-01	PCB,HEADER 50POS(2X20).150CC STR	1	1	1	1	J1
18	19		1214828-00	CONN, 25POS RCPT	1	1	1	1	J4
19	20		1214829-00	CARD EDGE 40PIN(2X20).125CC 90D	1	1	1	1	J3
20	21		1215048-01	PCB,HEADER 05PIN(1X07).098CC 90D	1	1	1	1	J5
21	22		1300005-07	R NETWORK 15-4.7K 5.0 % 16PIN	3	3	3	3	F8,F12,E59
22	23		1300219-00	68.0 .25 W 5.0 % CC	1	1	1	1	R40
23	24		1300229-00	100.0 .25 W 5.0 % CC	1	1	1	1	R34
24	25		1300250-00	150.0 .25 W 5.0 % CC	2	2	2	-	R51,R74
			CONT		-	-	-	3	R51,R68,R74
25	26		1300271-00	220.0 .25 W 5.0 % CC	1	1	1	1	R41
26	27		1300295-00	330.0 .25 W 5.0 % CC	3	3	3	3	R1,R46,R47
27	28		1300315-00	470.0 .50 W 5.0 % CC	1	1	1	1	R11

REVISION HISTORY			BASIC PART NO: 5413009			
ENG	ECO NUMBER	REV	SECTION A OF A	DRN: T. SHETRAWSKI	DATE: 30-MAR-78	D I G I T A L
RP	ML012	R	SECTION.VARIATION INDEX	CHK'D: T. SHETRAWSKI	DATE: 11-MAR-78	TITLE PARTS LIST
CJ	5413009-ML013	S	[A] 03,04,05,99			VT100 BASIC VIDEO
RP	5413009-ML014	T	[B]			
RP	5413009-ML015	U	[C]	DES.ENG: D. PUCCI	DATE: 30-MAR-78	
RP	5413009-ML016	V	[D]			
DP	5413009-ML017	W	[E]			DOCUMENT NUMBER
DP	5413009-ML018	Y	[F]	RESP.ENG.: D. PUCCI	DATE: 30-MAR-78	
JD	5413009-ML019	Z	[H]			SIZE / CODE / NUMBER / REV
RP	5413009-ML020	AA	[J]			
NW	5413009-ML021	AB	[K]	MFG.ENG.: T. CORCIARI	DATE: 30-MAR-78	K / PL / 5413009-0-DBP / AD
RP	5413009-ML023	AC	[L]			
BE	5413009-ML025	AD	[M]	ASSEMBLY NUMBER:	TOP DOCUMENT NUMBER:	FILE NAME: / EDIT #
			[N]	E-UA-5413009-0-0	B-DD-5413009-0-0	ML01AD.PLS / 26

"THIS DRAWING AND SPECIFICATIONS HEREIN, ARE THE PROPERTY OF DIGITAL EQUIPMENT CORPORATION AND SHALL NOT BE REPRODUCED OR COPIED OR USED IN WHOLE OR IN PART AS THE BASIS FOR THE MANUFACTURE OR SALE OF ITEMS WITHOUT WRITTEN PERMISSION.
COPYRIGHT (C) 1982, DIGITAL EQUIPMENT CORPORATION "

P A R T S L I S T

LINE	ITEM	DOCUMENT NUMBER	PART NUMBER	DESCRIPTION	QTY PER VARIATION 03	04	05	99	REFERENCE DESIGNATOR
28	29		1300316-00	470.0 .25 W 5.0 % CC	1	1	1	1	R21
29	30		1300365-00	1.0 K .25 W 5.0 % CC	2	2	2	2	R36,R67
30	31		1300398-00	1.80 K .25 W 5.0 % CC	1	1	1	1	R31
31	32		1300417-00	2.20 K .25 W 5.0 % CC	3	5	5	5	R18,R20,R22,R23,R27
32	33		1300426-00	2.70 K .25 W 5.0 % CC	1	1	1	1	R7
33	34		1300447-00	4.70 K .25 W 5.0 % CC	1	1	1	1	R25
34	35		1300479-00	10.0 K .25 W 5.0 % CC	4	4	4	4	R2,R6,R12,R26
35	36		1301317-00	10.0 .25 W 5.0 % CC	1	1	1	1	R57
36	37		1301422-00	7.50 K .25 W 5.0 % CC	8	8	8	8	R59-R66
37	38		1301424-00	680.0 .25 W 5.0 % CC	1	1	1	1	R37
38	39		1301425-00	300.0 .25 W 5.0 % CC	1	1	1	1	R50
39	40		1301475-00	1.10 K .25 W 5.0 % CC	1	1	1	1	R32
40	42		1301874-00	5.60 K .25 W 5.0 % CC	1	1	1	1	R9
41	43		1301972-00	270.0 .25 W 5.0 % CC	1	1	1	1	R38
42	44		1302379-00	75.0 .25 W 5.0 % CC	5	5	5	-	R35,R45,R52,R54,R68
			CONT		-	-	-	4	R35,R45,R52,R54,
43	45		1302391-00	20.0 K .25 W 5.0 % CC	2	2	2	2	R43,R48
44	47		1303178-00	620.0 .25 W 5.0 % CC	1	1	1	1	R49
45	48		1303187-00	820.0 K .25 W 5.0 % CC	1	1	1	1	R8
46	49		1304833-00	1.96 K .25 W 1.0 % RN55D-F10	1	1	1	1	R15
47	51		1313580-00	360.0 .25 W 5.0 % CC	1	1	1	1	R39
48	52		1314673-00	36.0 .25 W 5.0 % CC	1	1	1	1	R53
49	53		1501913-00	2N 2904A PNP 600MW SI 60 40 Y	3	3	3	3	Q2,Q3,Q4
50	54		1503409-00	DEC6534D PNP 310MW SI 40 90	1	1	1	1	Q1
51	55		1509524-00	2N 3904 NPN 310MW SI 40 40 M	1	1	1	1	Q5
52	56		1810694-06	XTAL 24.8832 MHZ	1	1	1	1	Y1
53	57		1814830-00	OSCILLATOR, XTAL 24.073 MHZ	1	1	1	1	E2
54	58		1909686-00	7404 INVERTER GATE-HEX 1I	1	1	1	1	E38
55	59		1909928-00	7416 INVERTER GATE-HEX 1I	2	2	2	2	E14,E18
56	60		1909929-00	7417 BUFFER GATE-HEX 1INP	1	1	1	1	E29
57	61		1910236-00	DEC 7426 NAND GATE-QUAD 2IN,O	1	1	1	1	E7
58	62		1910322-00	DEC 1488L DRIVER,LINE,QUAD,EI	1	1	1	1	E39
59	63		1912847-00	LS157 MUX 1 OF 2(QUAD)	1	1	1	1	E1
60	64		1912697-00	LS174 FF-D HEX W/CLEAR	2	2	2	2	E49,E61
61	65		1912799-00	LS00 NAND-GATE-QUAD 2IN,P	2	2	2	2	E23,E34
62	66		1912803-00	LS04 INVERTER GATE,HEX	1	1	1	1	E19
63	67		1912815-00	LS30 NAND GATE-SINGLE 8IN	1	1	1	1	E3
64	68		1912818-00	LS38 NAND BUFFER-QUAD 2IN	1	1	1	1	E28
65	69		1912824-00	LS74 FF-D DUAL,EDGE TRIGG	2	2	2	2	E13,E22
66	70		1912842-00	LS138 DECODER-THREE INPUT,	1	1	1	1	E27
67	71		1912843-00	LS139 DECODER, 2 OF 4(DUAL	1	1	1	1	E31
68	72		1912854-00	LS193 COUNTER,SYNCHR,4BIT,	3	3	3	3	E21,E25,E30
69	73		1912863-00	LS273 FF-D OCTAL W/CLEAR	2	2	2	2	E16,E20
70	74		1913105-00	FB 8224C DRIVER/GEN CLOCK F	1	1	1	1	E32
71	75		1913109-00	8228 BUFFER,DATA BASE FOR	1	1	1	1	E36
72	76		1913130-00	DEC 1489A RECEIVER,LINE,QUAD,	2	2	2	2	E37,E44
73	77		1914084-00	74S299 SHIFT REG.,8BIT RIGH	1	1	1	1	E10
74	78		1914156-00	LM 393 VOLT.COMPARATOR DUAL	1	1	1	1	E48

D	I	G	I	T	A	L	TITLE	SECTION A OF A	SIZE	CODE	DOCUMENT NUMBER	REV
							VT100 BASIC VIDEO		K	PL	5413009-0-DBP	AD

LINE	ITEM	DOCUMENT NUMBER	PART NUMBER	DESCRIPTION	QTY PER VARIATION 03	04	05	99	REFERENCE DESIGNATOR
75	79		1914213-00	81LS97 BUFFER GATE-OCTAL 2I	4	4	4	4	E15,E41,E42,E58
76	80		1914214-00	LS374 FF-D OCTAL EDGE TRIG	2	2	2	2	E26,E33
77	81		1914423-01	CUSTOM LSI-BIPOLAR LS	1	1	1	1	E6
78	82		1914424-01	CUSTOM LSI-BIPOLAR L	1	1	1	1	E5
79	83		2112623-02	*** THIS ITEM IS NOT USED ***	-	-	-	-	
80	84		2113106-01	1K MOS RAM 250NS	2	2	2	2	E11,E17
81	85		2113107-01	P 8251A PUSART COMM. INTERFA	1	1	1	1	E43
82	86		2113108-01	8080A-1 MICROPROCESSOR UNIT	1	1	1	1	E35
83	87		2113937-00	UART 125K BUAD	1	1	1	1	E55
84	88		2114212-00	P 2114-2 RAM,1024X4,STATIC	6	6	6	6	E46,E47,E50,E51,E53,E54
85	89		2114524-01	ROM 100X14BIT,ERASABLE,	1	1	1	1	E24
86	90		23018E2-00	E2-03	1	1	1	1	E4
87	91		7424901-01	BRACKET,GROUNDING,EIA CONNECTOR	1	1	1	1	
88	92		9006732-00	EYELET,ROLLED 0.1210DX0.219	3	3	3	3	
89	93		9009185-00	JUMPER, WIRE, INSULATED, BLACK B	4	4	4	4	W1,W3,W4,W7
90	95		23061E2-00	E2-02	1	-	-	-	E56
91	96		23032E2-00	E2-02	1	-	-	-	E52
92	97		23033E2-00	E2-02	1	-	-	-	E45
93	98		23034E2-00	E2-02	1	-	-	-	E40
94	102		1001610-00	.01 MFD 50V +80-20% Z5U CER	4	4	4	4	C16,C17,C23,C51
95	103		1301320-00	1.20 K .25 W 3.0 % CC	1	1	1	1	R30
96	104		1301322-00	180.0 .25 W 5.0 % CC	1	1	1	1	R33
97	105		1301477-00	82.0 .25 W 5.0 % CC	1	1	1	1	R42
98	106		1300202-00	47.0 .25 W 5.0 % CC	1	1	1	1	R44
99	107		1303155-00	21.50 K .25 W 1.0 % RN55D-F10	1	1	1	1	R10
100	108		1309412-00	18.20 K .25 W 1.0 % RN55D-F10	1	1	1	1	R13
101	109		1609620-00	2.2 UH *RFCS2.2	1	1	1	1	L1
102	110		1002608-00	18.0 MMF 100V 55200PPM MICA	1	1	1	1	C53
103	112		1013466-05	56.0 MMF 50V 5% CER	1	1	1	1	C47
104	113		23180E2-00	E2-02	-	1	1	-	E56
105	114		23181E2-00	E2-02	-	1	1	-	E52
106	115		23182E2-00	E2-02	-	1	1	-	E45
107	116		23183E2-00	E2-02	-	1	1	-	E40
108	117		1215006-07	SKT,IC 28PIN DIP TIN SOLD	1	1	1	1	XE6
109	118		23094E2-00	E2-03,E2-04	-	-	1	-	E9
110	119	A-SP-3700553-0-0	3700553-00	PKG MODULE 5413009	REF	REF	REF	REF	
111	120	A-SP-3700428-0-0	3700428-00	INSTR PKG. BULK CARTON 99-06476-	REF	REF	REF	REF	
112	121		1300005-03	R NETWORK 13-10K 5.0 % 14PIN	1	1	1	1	E57
113	123		1000021-00	220.0 MMF 100V 5%200PPM MICA	1	1	1	1	C57
114	124		9107560-01	WIRE,BUSS 22AWG TIN BARE	A/R	A/R	A/R	A/R	
115	125		1013466-24	47.0 MMF 50V 5% CER	3	3	3	3	C61,C58,C60
116	126		1013466-19	470.0 MMF 50V 5% CER	1	1	1	1	C20
117	127		1618238-02	BEAD,FERRITE .1380DX.330LG	6	6	6	6	L4-L9
118	128		1618437-00	BEAD,FERRITE .23600X.394LG	3	3	3	3	L2,L3,L10
119	129		2118615-02	GEN.BAUD RATE,PROGRA	1	1	1	1	E60

D	I	G	I	T	A	L	TITLE	SECTION A OF A	SIZE	CODE	DOCUMENT NUMBER	REV
							VT100 BASIC VIDEO		K	PL	5413009-0-DBP	AD

LINE	ITEM	DOCUMENT NUMBER	PART NUMBER	DESCRIPTION	QTY PER VARIATION 03	04	05	99	REFERENCE DESIGNATOR
120	NOTE:	FOR INDIVIDUAL FIELD SERVICE/CUSTOMER SPARES SHIPMENTS USE PACKAGING INSTRUCTION, A-SP-3700553-0-0;							
121	NOTE:	FOR BULK INTERPLANT SHIPMENTS USE PACKAGING INSTRUCTION, A-SP-3700428-0-0 VARIATION -02							
122	NOTE:	L2 REQUIRES THE INSERTION OF 1.5 TURNS OF 22 AWG BUSS WIRE SEE DETAIL ON E-UA-5413009-0-0.							
123	NOTE:	L3 AND L10 REQUIRES THE INSERTION OF 2.5 TURNS OF 22 AWG BUSS WIRE							
124	NOTE:	SEE DETAIL ON E-UA-5413009-0-0.							

"THIS DRAWING AND SPECIFICATIONS, HEREIN, ARE THE PROPERTY OF DIGITAL EQUIPMENT CORPORATION AND SHALL NOT BE REPRODUCED OR COPIED OR USED IN WHOLE OR IN PART AS A BASIS FOR MANUFACTURE OR SALE OF ITEMS WITHOUT WRITTEN PERMISSION. COPYRIGHT © 1978, DIGITAL EQUIPMENT CORPORATION"

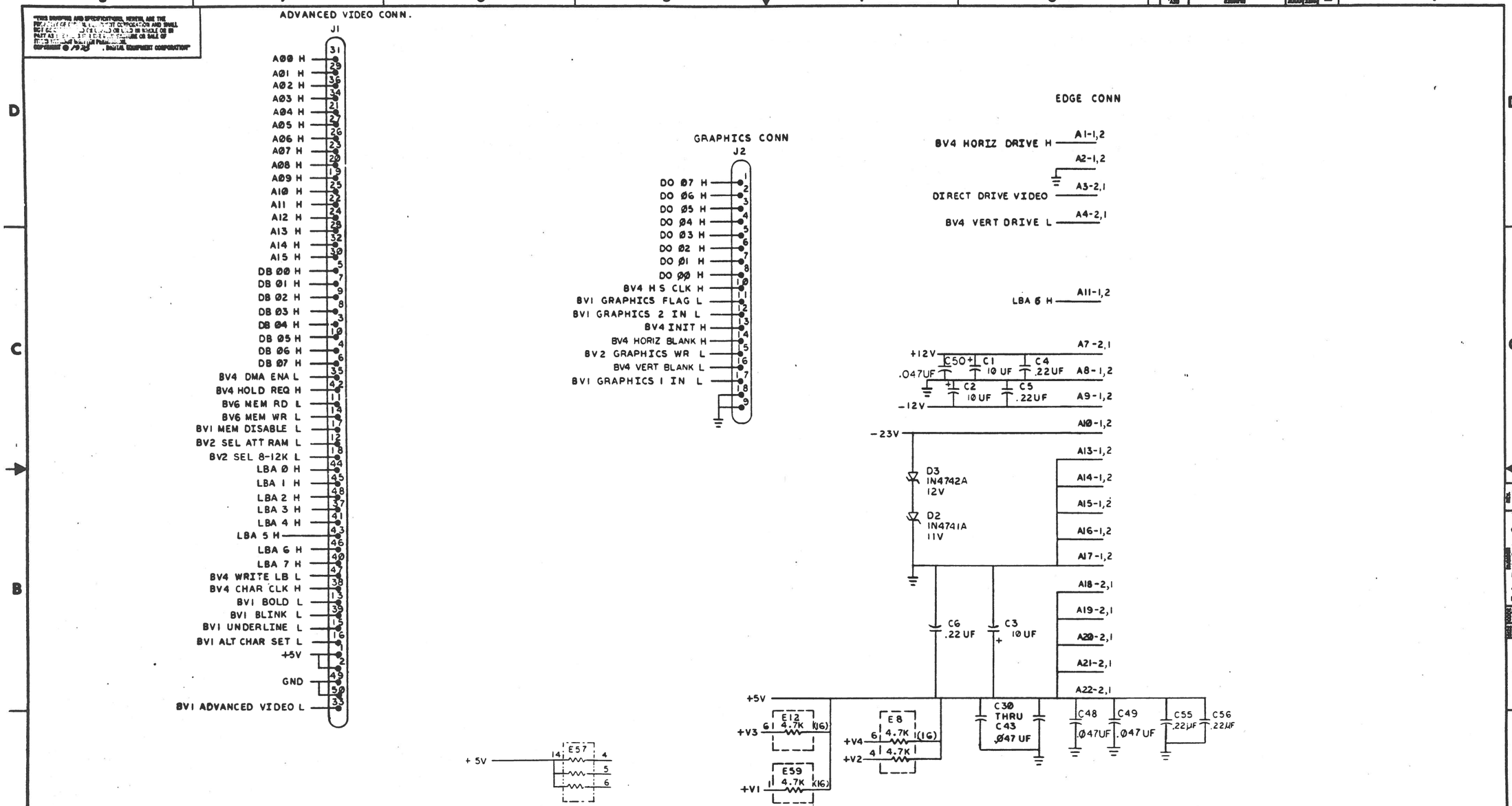

REVISIONS			
CHK	CHANGE NO.		REV.
	5413009-ML001	R. PUCCI	C
	5413009 ML002	R. PUCCI	D
	5413009-ML013	R. PUCCI	S
	5413009 - ML014	CRAIG JAMES	T
	5413009 - ML017	R. PUCCI	V
	5413009 - ML018	R. PUCCI	W
	5413009 ML019	R. PUCCI	U
	5413009 ML000	R. PUCCI	Y
	5413009-ML021	R. PUCCI	Z
	5413009 - ML023	N. WAINIO	AA
	5413009 - ML025	R. PUCCI	AB
	ML011	CARTER	P
		K. HOFFMAN	
		R. PUCCI	

DRN.		FIRST USED ON VT100
CHK'D		
ENG.		TITLE VT100 BASIC VIDEO (BV1)
PROJ. ENG.		
PROD		
NEXT HIGHER ASSY.	E-UA-5413009-0-0	SIZE D CODE CS NUMBER 5413009-0-1 REV. AB
SCALE		
SHEET 1 OF 6		DIST.

DCS5413009-0-1 AB

"THIS DRAWING AND SPECIFICATIONS, HEREIN, ARE THE PROPERTY OF DIGITAL EQUIPMENT CORPORATION AND SHALL NOT BE REPRODUCED OR COPIED OR USED IN WHOLE OR IN PART AS THE BASIS FOR THE MANUFACTURE OR SALE OF ITEMS WITHOUT WRITTEN PERMISSION. COPYRIGHT © 1978 DIGITAL EQUIPMENT CORPORATION"

NOTE:
1. OPTIONAL DO NOT INSERT.

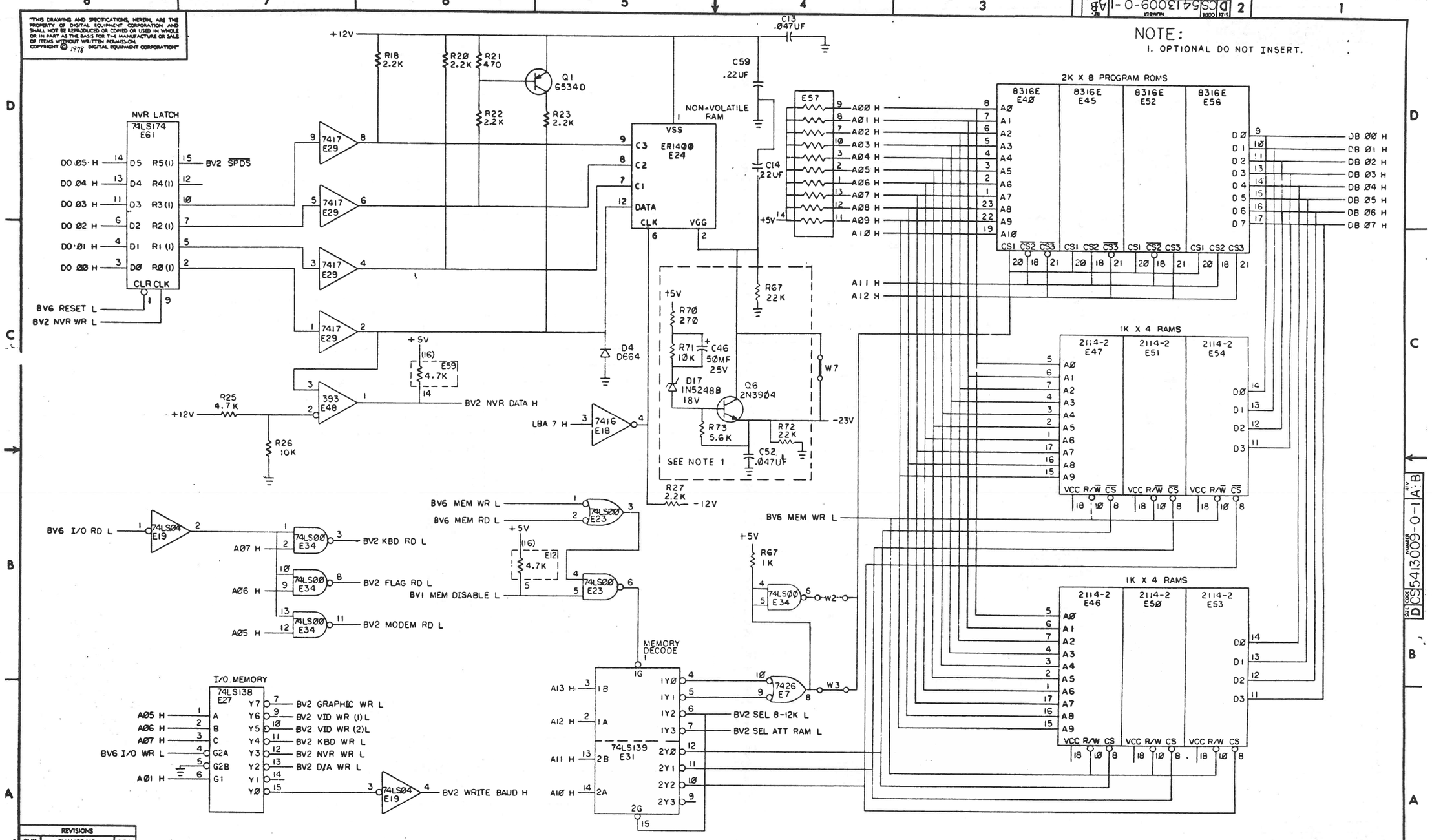

REVISIONS		
CHK	CHANGE NO.	REV.

TITLE	SIZE	CODE	NUMBER	REV.
VT100 BASIC VIDEO (BV2)	D	CS	5413009-0-1	A B
SCALE	SHEET 2 OF 6		LIST.	

"THIS DRAWING AND SPECIFICATIONS, HEREIN, ARE THE PROPERTY OF DIGITAL EQUIPMENT CORPORATION AND SHALL NOT BE REPRODUCED OR COPIED OR USED IN WHOLE OR IN PART AS THE BASIS FOR THE MANUFACTURE OR SALE OF ITEMS WITHOUT WRITTEN PERMISSION. COPYRIGHT © 1978 DIGITAL EQUIPMENT CORPORATION"

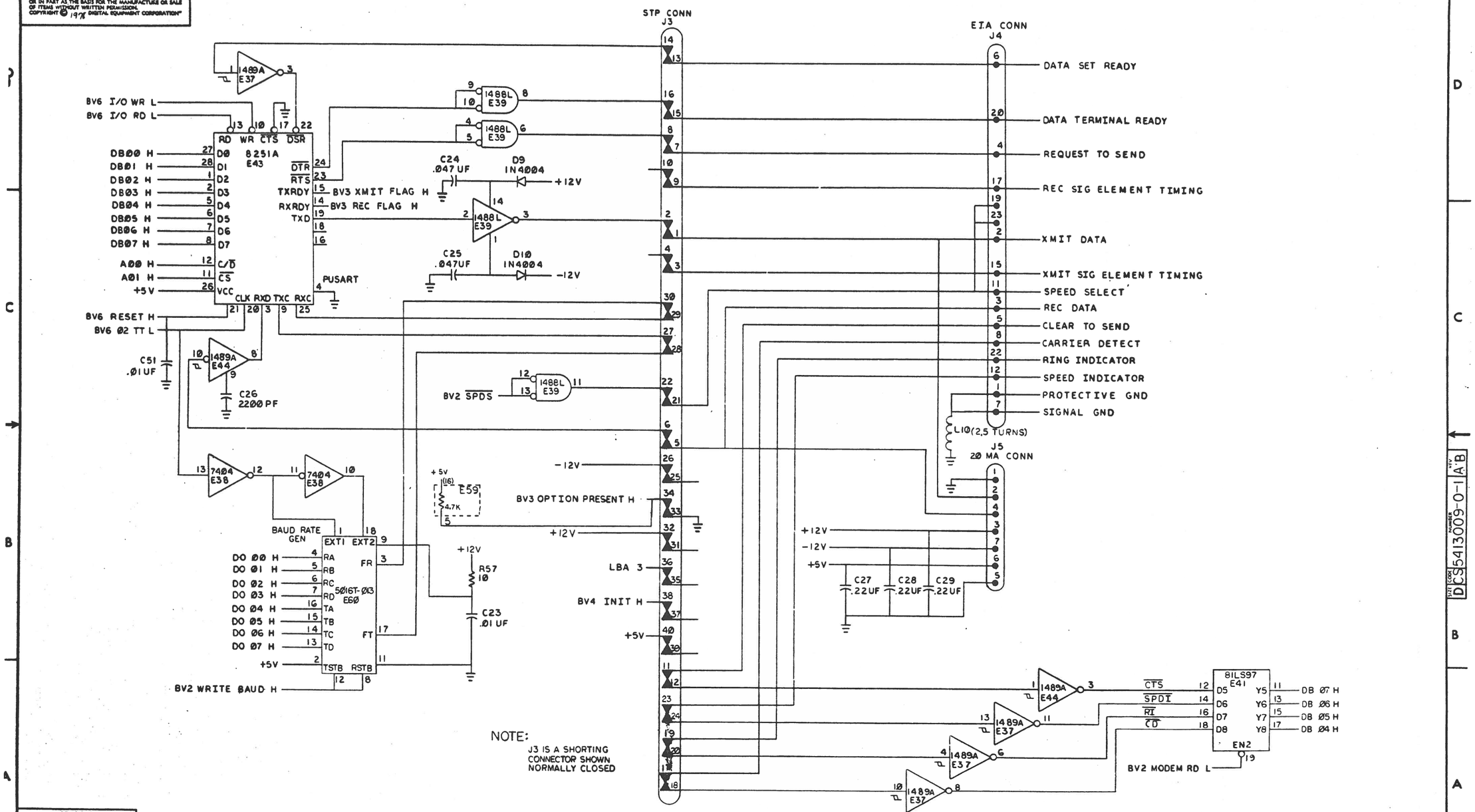

NOTE:
J3 IS A SHORTING CONNECTOR SHOWN NORMALLY CLOSED

REVISIONS		
CHK	CHANGE NO.	REV.

TITLE	SIZE	CODE	NUMBER	REV.
VT100 BASIC VIDEO (BV3)	D	CS	5413009-0-1	AB
SCALE — / —	SHEET 3 OF 6	DIST.		

"THIS DRAWING AND SPECIFICATIONS, HEREIN, ARE THE PROPERTY OF DIGITAL EQUIPMENT CORPORATION AND SHALL NOT BE REPRODUCED OR COPIED OR USED IN WHOLE OR IN PART AS THE BASIS FOR THE MANUFACTURE OR SALE OF ITEMS WITHOUT WRITTEN PERMISSION.
COPYRIGHT © 1978 DIGITAL EQUIPMENT CORPORATION"

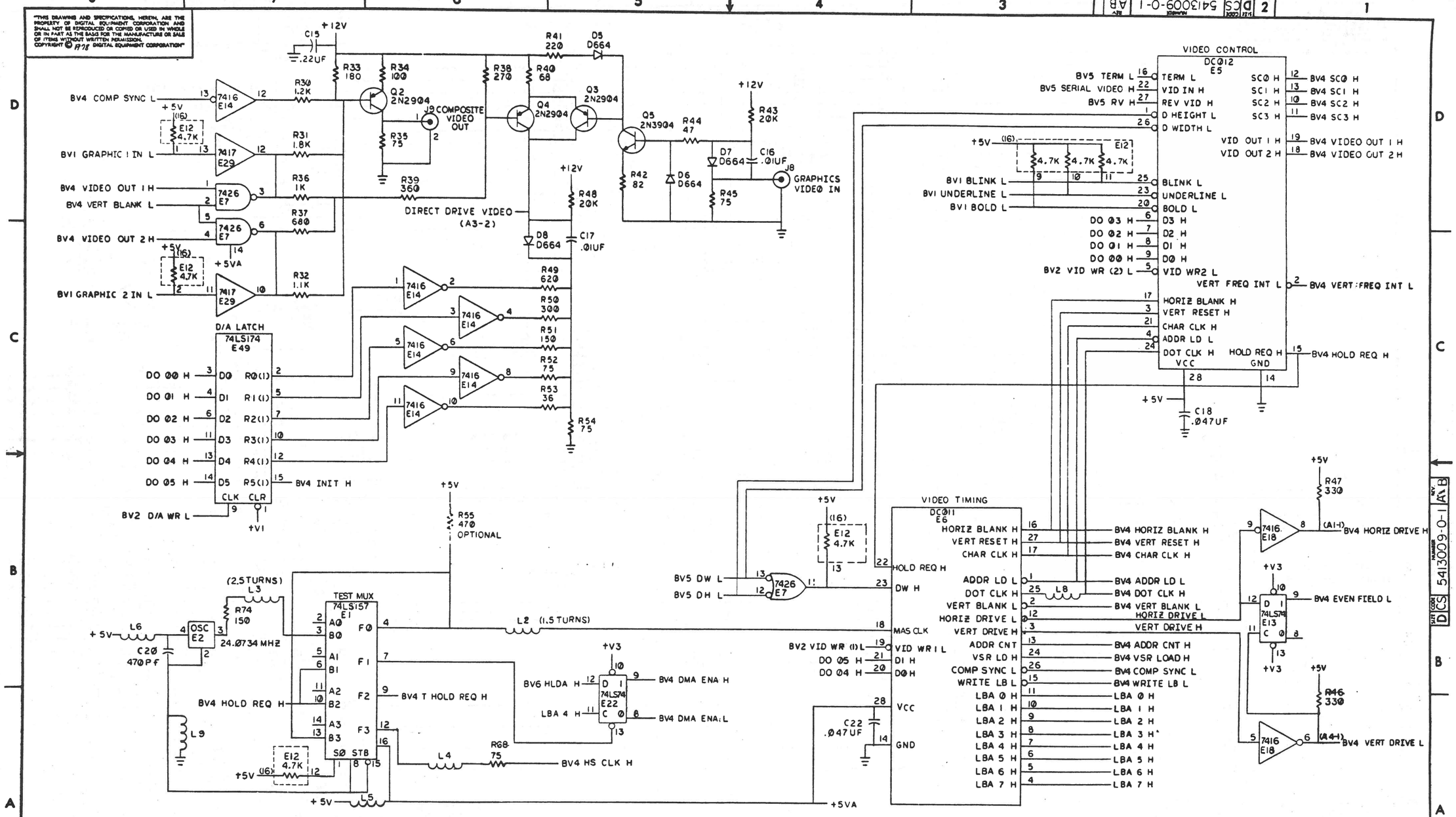

REVISIONS		
CHK	CHANGE NO.	REV.

TITLE	SIZE	CODE	NUMBER	REV.
VT100 BASIC VIDEO (BV4)	D	CS	5413009-0-1	AB
SCALE	SHEET 4 OF 6	DIST.		

"THIS DRAWING AND SPECIFICATIONS, HEREIN, ARE THE PROPERTY OF DIGITAL EQUIPMENT CORPORATION AND SHALL NOT BE REPRODUCED OR COPIED OR USED IN WHOLE OR IN PART AS THE BASIS FOR THE MANUFACTURE OR SALE OF ITEMS WITHOUT WRITTEN PERMISSION. COPYRIGHT © '77 DIGITAL EQUIPMENT CORPORATION"

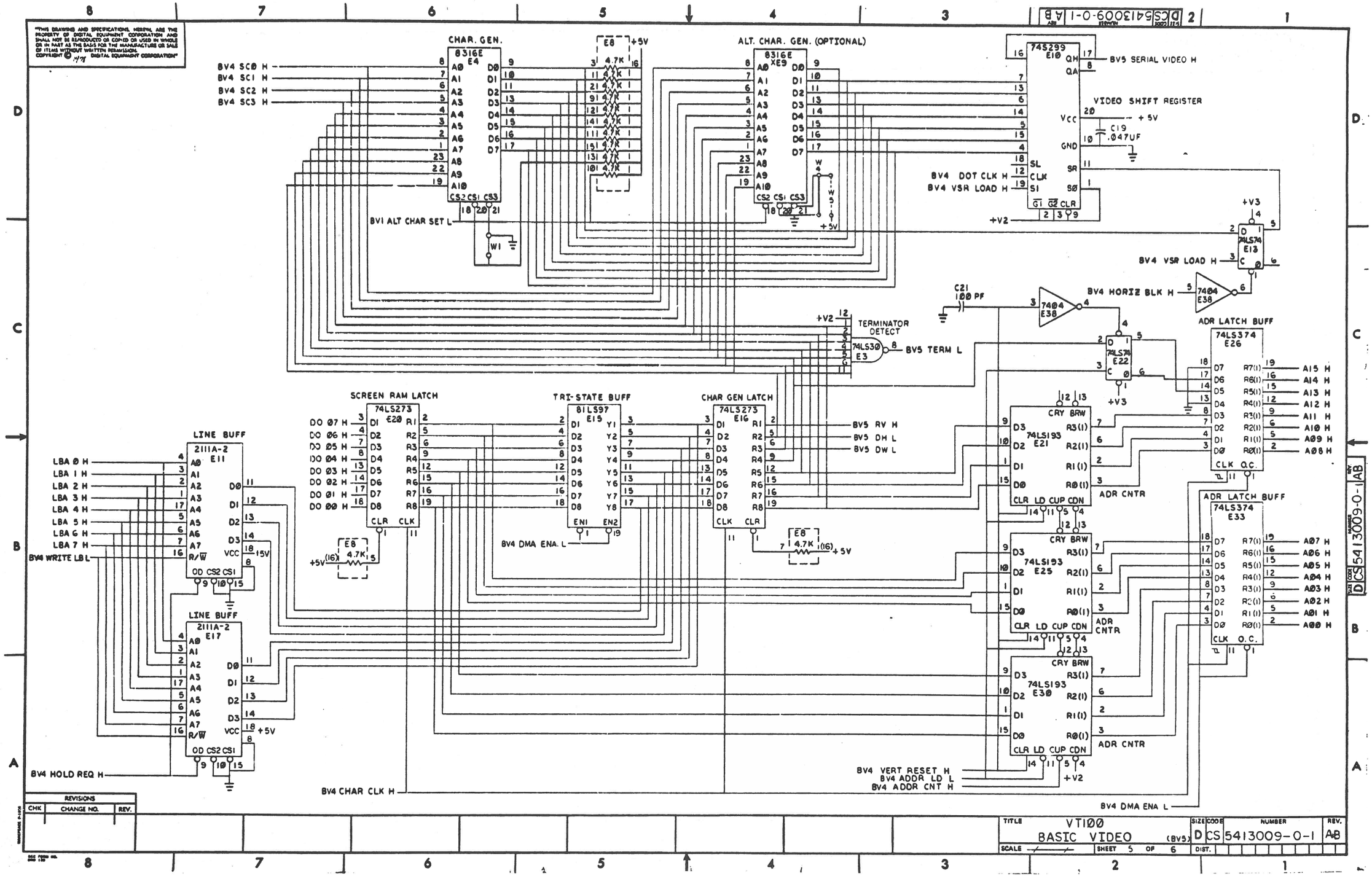

REVISIONS		
CHK	CHANGE NO.	REV.

TITLE	SIZE	CODE	NUMBER	REV.
VT100 BASIC VIDEO (BV5)	D	CS	5413009-0-1	A8
SCALE —	SHEET 5 OF 6	DIST.		

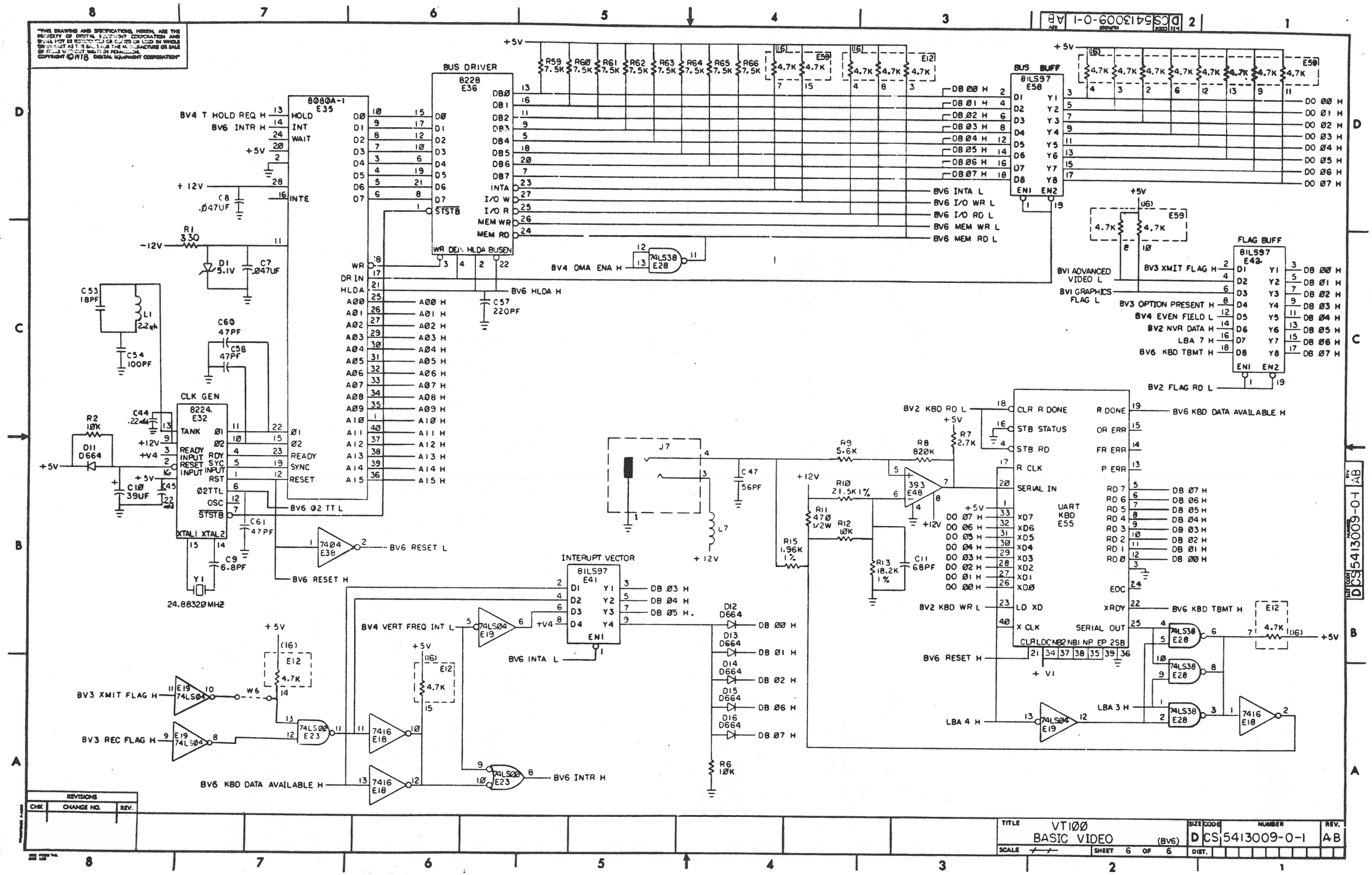
BUS DRIVER
8228
E36
8080A-1
E35
CLK GEN
8224
E32
BUS BUFF
81LS97
E58
FLAG BUFF
81LS97
E42
INTERUPT VECTOR
81LS97
E41
UART
KBD
E55
24.88320MHZ
BV4 T HOLD REQ H
BV6 INTR H
BV4 DMA ENA H
BV6 HLDA H
BV6 INTA L
BV6 I/O WR L
BV6 I/O RD L
BV6 MEM WR L
BV6 MEM RD L
BV3 XMIT FLAG H
BV3 REC FLAG H
BV6 KBD DATA AVAILABLE H
BV6 INTR H
BV6 RESET L
BV6 RESET H
BV6 Ø2 TT L
BV4 VERT FREQ INT L
BV2 KBD RD L
BV2 KBD WR L
BV6 KBD TBMT H
BV2 FLAG RD L
BV6 KBD DATA AVAILABLE H
BV3 OPTION PRESENT H
BV4 EVEN FIELD L
BV2 NVR DATA H
LBA 7 H
BV6 KBD TBMT H
BV1 ADVANCED VIDEO L
BV1 GRAPHICS FLAG L
LBA 3 H
LBA 4 H
SERIAL OUT
SERIAL IN
+5V
+12V
-12V
+V4
+V1
DCS5413009-0-1 AB
TITLE VT100
BASIC VIDEO (BV6)
SIZE D
CODE CS
NUMBER 5413009-0-1
REV. AB
SCALE
SHEET 6 OF 6
DIST.
REVISIONS
CHK
CHANGE NO.
REV.

REVCRK INSTRUCTIONS
ECO-MLG19 COMPONENT ADDS SIDE1

19-1 F1 FROM 4PIN DIP OPTIONAL MOUNTING HOLE TO ANODE MTG HOLE OF D42.

WIRE ADDS SIDE 1

19-2 ADD JUMPER FROM Z1-H2 TO ETCH BETWEEN C36 AND C23

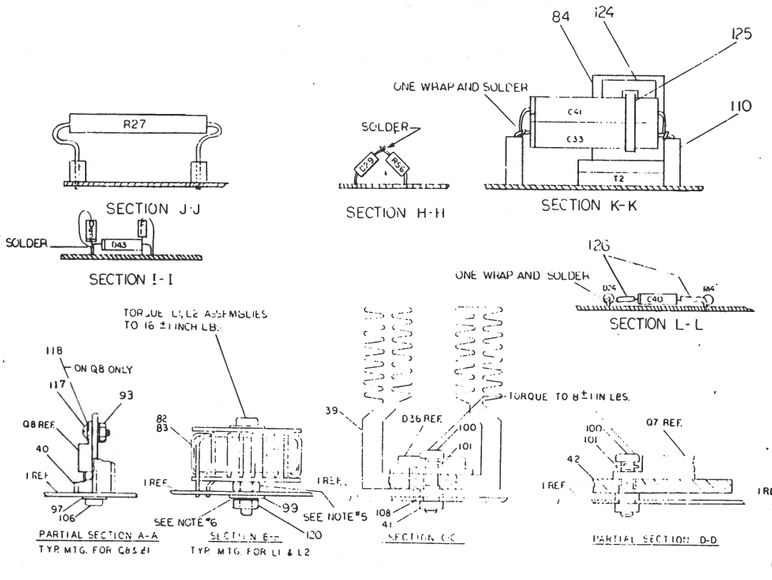

NOTES:

5. BEFORE ASSEMBLING ITEMS* 82&83, THE NUT USED ON THESE ASSEMBLIES SHOULD BE LOCKED INTO PLACE USING PERMABOND 240/2405 OR LOCTITE 414.

6 MAXIMUM ALLOWABLE PROTRUSION ON SIDE TWO OF ETCH BOARD FROM BOTTOM OF ETCH BOARD TO BOTTOM OF NYLOK OR SCREW PROTRUSION IS 130 MIL.

7 DIODE D42 MUST BE MOUNTED UPRIGHT USING THE CATHODE'S MOUNTING HOLE. THE ANODE OF D42 MUST BE SOLDERED TO D43'S CATHODE. F1 MUST BE MOUNTED UPRIGHT IN OPTIONAL 4PIN DIP MOUNTING HOLE. THE TOP LEAD OF FUSE F1 SHOULD BRIDGE ACROSS ETCH CUT TO THE ORIGINAL MOUNTING HOLE OF D42'S ANODE.

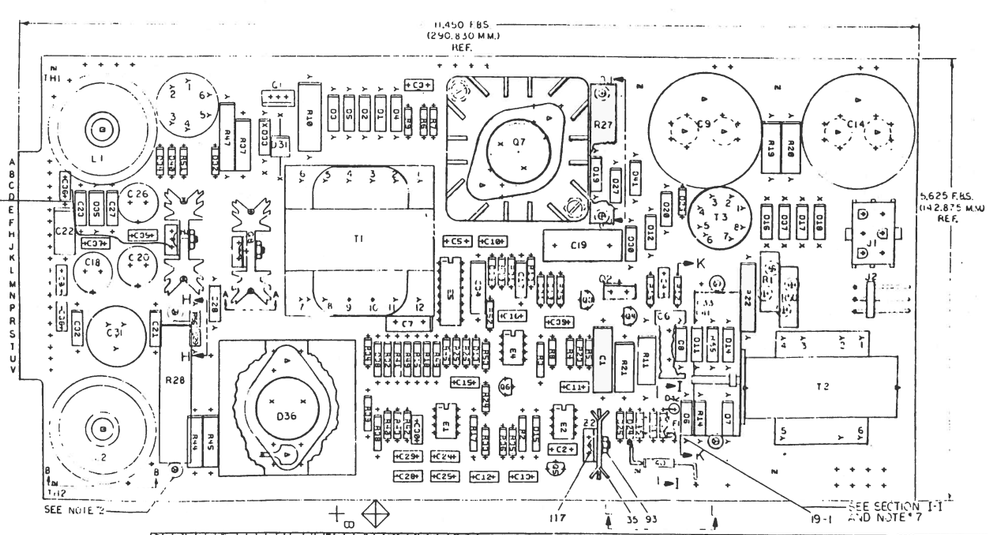

NOTES:
1. THIS BOARD REQUIRES U.L. APPROVAL
2. DIR27/Z21 (GRANDCRAP) MOUNTED ON OFF THE BOARD USING CERAMIC STAND OFF
3. [illegible] WITH DIELECTRIC
4. [illegible]
5. SEE 1D/TESTUP OF SHEET

CHANGE NO.	REV	DESCRIPTION

ETCH REV. C
PCB DESIGN GMBH SIDE REV. C

SIGNATURES	DATE
DRN.	
CHK.	
ENGINEERING	
PROD.	

digital

TITLE: POWER SUPPLY

SCALE 2/1 | SIZE E | CODE UA | NUMBER 54[illegible] | REV

SHT. 1 OF 1

NEXT HIGHER ASSY. B-DD-5412-[illegible]

"THIS DRAWING AND SPECIFICATIONS, HEREIN, ARE THE PROPERTY OF DIGITAL EQUIPMENT CORPORATION AND SHALL NOT BE REPRODUCED OR COPIED OR USED IN WHOLE OR IN PART AS THE BASIS FOR THE MANUFACTURE OR SALE OF ITEMS WITHOUT WRITTEN PERMISSION. COPYRIGHT © 1979 DIGITAL EQUIPMENT CORPORATION"

REVISIONS		
CHK	CHANGE NO.	REV.

TITLE	SIZE	CODE	NUMBER	REV.
H7831 POWER SUPPLY	D	UA	541 2996-0-0	R
SCALE 2/1 SHEET 2 OF 3	DIST.			

"THIS DRAWING AND SPECIFICATIONS, HEREIN, ARE THE PROPERTY OF DIGITAL EQUIPMENT CORPORATION AND SHALL NOT BE REPRODUCED OR COPIED OR USED IN WHOLE OR IN PART AS THE BASIS FOR THE MANUFACTURE OR SALE OF ITEMS WITHOUT WRITTEN PERMISSION. COPYRIGHT ©1979 DIGITAL EQUIPMENT CORPORATION"

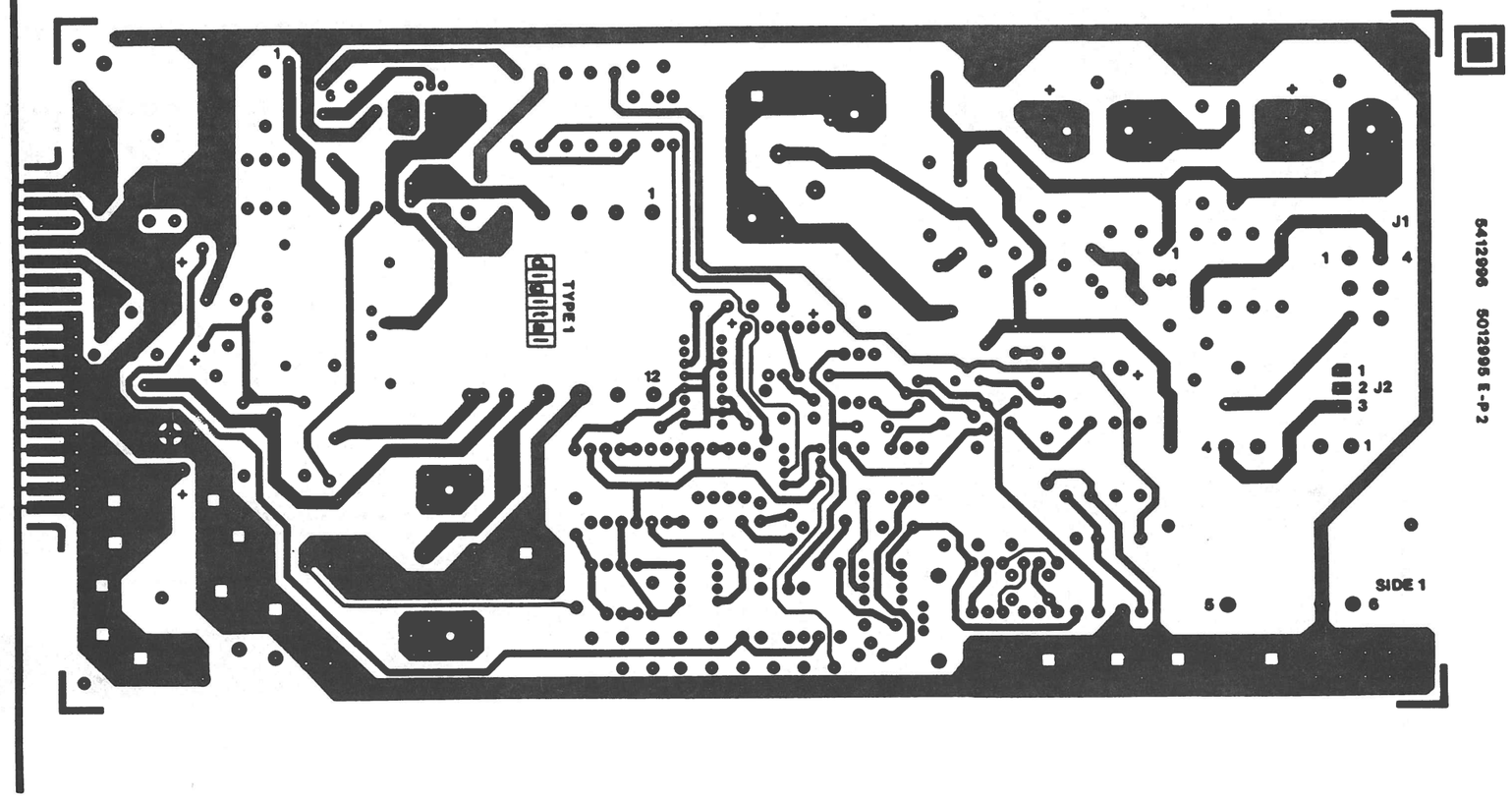

U/L APPROVAL

REVISIONS		
CHK	CHANGE NO.	REV.

TITLE	SIZE	CODE	NUMBER	REV.
H7831 POWER SUPPLY	D	UA	5412996-0-0	F
SCALE 2/1	SHT 3 OF 3		DIST.	

AUTOMATED BY PRTLST.1D(11)

P A R T S L I S T

LINE	ITEM	DOCUMENT NUMBER	PART NUMBER	DESCRIPTION	QTY PER VARIATION 00	REFERENCE DESIGNATOR
1	1	E-MD-5012995-0-0	5012995-00	H7831 POWER SUPPLY	1	
2	2		1000009-00	33.0 MMF 100V 5%200PPM MICA	1	C2
3	3		1000016-00	100.0 MMF 100V 5%200PPM MICA	3	C5,C15,C16
4	4		1000039-00	.056 MFD 200V 10% MYLR	1	C1
5	5		1000042-00	1000.0 MMF 100V 5%200PPM MICA	5	C13,C24,C25,C28,C29
6	6		1000055-00	2200.0 MMF 250V 20% Y5S DISC	2	C3,C4
7	7		1001610-00	.01 MFD 50V +80-20% Z5U CER	5	C30,C35,C36,C37,C38
8	8		1004812-00	15 MFD 20V 10% S.TANT	2	C34,C40
9	9		1005507-00	1 MFD 100V +50-10% AL EL	1	C22
10	10		1011847-01	.01 MFD 400V 10% POLYPROP	1	C6
11	11		1015202-02	.0033 MFD 1600V 10% POLYPROP	1	C19
12	12		1001776-00	1 MFD 35V 10% S.TANT	1	C17
13	13		1010274-00	.22 MFD 50V +80-20% Z5U CER	4	C8,C10,C11,C12
14	14		1012607-00	560 MFD 20V+100-10% AL EL	1	C26
15	15		1012607-04	270 MFD 40V+100-10% AL EL	1	C20
16	16		1012607-05	20 MFD 200V+100-10% AL EL	1	C18
17	17		1013466-11	.22 MFD 50V +80-20% Z5U CER	4	C21,C23,C27,C32
18	18		1014170-00	*** THIS ITEM IS NOT USED ***	-	
19	19		1014277-00	3800 MFD 6.3V +75-10% AL EL	1	C31
20	20		1014861-00	590 MFD 200V +50-10% AL EL	2	C9,C14
21	21		1014883-00	470 MFD 50V +75-10% AL EL	2	C33,C41
22	22		1100114-00	D 664 QS\75PCB PIV= 25V SP	5	D10,D13,D39,D40,D21
23	23		1105796-00	1N 4004 PIV=400 I= 1A D041 SP	8	D32,D34,D24,D25,D42-D45
24	24		1105873-00	4M5-1AZ1 VZ= 5.1 1% .400W	1	D38
25	25		1109991-01	4M6.8AZ1 VZ= 6.8 1% .40W	1	D15
26	26		1112594-01	A115B PIV=200 I= 3A	1	D31
27	27		1112595-00	A114F PIV= 50 I= 1A	7	D1,D2,D3,D5,D12,D41,D20
28	28		1112595-01	A114B PIV=200 I= 1A	6	D4,D6,D7,D8,D11,D14
29	29		1112595-02	A114M PIV=600 I= 1A	2	D27,D28
30	30		1115529-00	UES2601 PIV=50V I=30A	1	D36

REVISION HISTORY			BASIC PART NO: 5412996
ENG	ECO NUMBER	REV	SECTION A OF A
JB	PN003	E	SECTION.VARIATION INDEX
JB	PN004	F	[A] 00
EJ	PN005	H	[B]
CJ	5412996-ML006	J	[C]
RP	ML008	K	[D]
RP	ML009-5412996	L	[E]
GC	5412996-ML011	M	[F]
GC	5412996-ML015	N	[H]
GC	5412996-ML016	P	[J]
DS	5412996-ML017	R	[K]
DS	5412996-ML018	S	[L]
DS	5412996-ML019	T	[M]
			[N]

DRN: VIN PARECHANIAN	DATE: 2-20-78	D I G I T A L
CHK'D: KENT GLEEZEN	DATE: 7-JUL-80	TITLE PARTS LIST H7831 POWER SUPPLY
DES.ENG: BOB PEDERSEN	DATE: 7-JUN-78	
RESP.ENG.: BOB PENDERSON	DATE: 7-JUN-78	DOCUMENT NUMBER
MFG.ENG.: T. CORCIARI	DATE: 7-JUN-78	SIZE: K; CODE: PL; NUMBER: 5412996-0-DBP; REV: T
ASSEMBLY NUMBER: E-UA-5412996-0-0	TOP DOCUMENT NUMBER: B-DD-5412996-0-0	FILE NAME: Z1085T.PLS; EDIT #: 45

"THIS DRAWING AND SPECIFICATIONS HEREIN, ARE THE PROPERTY OF DIGITAL EQUIPMENT CORPORATION AND SHALL NOT BE REPRODUCED OR COPIED OR USED IN WHOLE OR IN PART AS THE BASIS FOR THE MANUFACTURE OR SALE OF ITEMS WITHOUT WRITTEN PERMISSION.
COPYRIGHT (C) 1982, DIGITAL EQUIPMENT CORPORATION "

LINE	ITEM	DOCUMENT NUMBER	PART NUMBER	DESCRIPTION	QTY PER VARIATION 00	REFERENCE DESIGNATOR
31	31		1114602-00	UES1302 PIV=100V I= 4A	2	D29,D33
32	32		1115112-00	PIV=800V I=1A	2	D19,D30
33	33		1115182-00	1N 5626 PIV=600 I= 3A	4	D16,D17,D18,D37
34	34		1115224-00	VOLT.TRANS.SUPPRESS 12.1	1	D35
35	35		1215228-00	HEAT SINKS,TO-220 01.25X0.87	1	
36	36		1212204-10	HEADER.156 3POS RT ANGLE	1	J2
37	38		1212297-05	MATE-N-LOK 06PIN(2X03).250CC HDR	1	J1
38	39		1211987-03	HEAT SINK,TO-3 1.750X01.7	1	
39	40		1213921-03	HEAT SINK,EXTRUSION 1.380X2.50	2	
40	41		1214789-00	INSERT,THREAD	4	
41	42		1210012-04	HEAT SINKS,	1	
42	43		1300219-00	68.0 .25 W 5.0 % CC	2	R9,R12
43	44		1300249-00	150.0 .50 W 5.0 % CC	1	R14
44	45		1300271-00	220.0 .25 W 5.0 % CC	1	R6
45	46		1300288-00	270.0 2.0 W10.0 % CC	1	R10
46	47		1300316-00	470.0 .25 W 5.0 % CC	2	R13,R46
47	48		1300365-00	1.0 K .25 W 5.0 % CC	3	R26,R35,R43
48	49		1300417-00	2.20 K .25 W 5.0 % CC	1	R8
49	50		1300426-00	2.70 K .25 W 5.0 % CC	1	R23
50	51		1300488-00	12.0 K .25 W 5.0 % CC	1	R4
51	52		1300496-00	15.0 K .25 W 5.0 % CC	1	R24
52	53		1300536-00	100.0 K 1.0 W10.0 % CC	2	R19,R20
53	54		1301317-00	10.0 .25 W 5.0 % CC	3	R7,R15,R25
54	55		1302091-00	330.0 K .25 W 5.0 % CC	2	R30,R51
55	56		1302177-00	47.0 K .25 W 5.0 % CC	1	R31
56	57		1302388-00	2.0 K .25 W 5.0 % CC	1	R29
57	58		1310867-00	680.0 K .25 W 5.0 % CC	1	R33
58	59		1303187-00	820.0 K .25 W 5.0 % CC	1	R5
59	60		1304833-00	1.96 K .25 W 1.0 % RN55D-F10	1	R3
60	61		1304854-00	5.11 K .25 W 1.0 % RN55D-F10	4	R32,R41,R48,R49
61	62		1304862-00	1.62 K .25 W 1.0 % RN55D-F10	1	R16
62	63		1304868-00	2.74 K .25 W 1.0 % RN55D-F10	1	R2
63	64		1305108-00	1.47 K .25 W 1.0 % RN55D-F10	1	R39
64	66		1309422-00	5.10 .50 W 5.0 % CF	1	R34
65	67		1309595-00	1.0 M .25 W 5.0 % CC	3	R36,R40,R42
66	68		1310188-00	300.0 10.0 W 5.0 % WW	1	R28
67	69		1311338-00	82.0 3.0 W 5.0 % WW	2	R21,R11
68	70		1305336-00	200.0 K .25 W 1.0 % RN55D-F10	1	R17
69	71		1313014-00	.01 3.75 W 3.0 % WW	3	R37,R44,R45
70	72		1317917-00	500.0 13.0 W 5.0 % WW	1	R27
71	73		1313341-00	*** THIS ITEM IS NOT USED ***	-	
72	74		1314270-00	5.0 15.0 % NTC THERM	2	R1,R50
73	75		1314350-00	1.0 2.0 W10.0 % FUSE	2	R22,R47
74	76		1510705-00	XA 05 NPN 500MW SI 60 50 P	2	Q3,Q6
75	77		1510706-00	XA 55 PNP 500MW SI 60 50 P	2	Q4,Q5
76	78		1517910-00	2N 6547 NPN TO-3	1	Q7
77	79		1514271-00	D 44Q1 NPN 31W SI	3	Q1,Q2,Q8
78	80		1614272-00	PULSE XFMR,4 WOUND	1	T3

D	I	G	I	T	A	L	TITLE	SIZE	CODE	DOCUMENT NUMBER	REV
							H7831 POWER SUPPLY SECTION A OF A	K	PL	5412996-0-DBP	T

LINE	ITEM	DOCUMENT NUMBER	PART NUMBER	DESCRIPTION	QTY PER VARIATION 00	REFERENCE DESIGNATOR
79	81		1614273-00	PULSE XFMR,TRI-WOUND	1	T4
80	82		1615251-00	42.0 UH VARIABLE L 11A	1	L2
81	83		1615252-00	210.0 UH VARIABLE 2.75A	1	L1
82	84		1615253-00	XFMR P=AB S=25V	1	T2
83	85		1615668-01	XFMR P=240/480 S=120	1	T1
84	86		1910282-00	301AN OP AMP	1	E2
85	87		1911944-00	555CN TIMER,FUNCT.BLOCK	1	E4
86	88		1912048-06	DEC 7812 VOLT REG,FIX +12V	2	Z1,Z2
87	89		1914156-00	LM 393 VOLT.COMPARATOR DUAL	1	E1
88	90		1914250-00	3524 MODULATOR-REGULATING	1	E5
89	93		9006557-00	NUT,KEP 4-40X 1/4 AF	3	
90	97		9008172-00	WASHER,FLAT SST	4	
91	99		9006660-00	WASHER,FLAT SST	2	
92	100		9007793-01	SCREW,MACH PAN PHIL 6-	4	
93	101		9007801-00	WASHER,HELICAL SPLIT SST	4	
94	106		9009236-01	SCREW,TAP PAN PHIL THD CT 4-	4	
95	108		9009676-00	TERM,SOLDER BARRIER STR	1	
96	109		9009795-00	SCREW,SEMS PAN SLOT 10-	4	
97	110		9009798-00	SPACER,CLEAR HOLE RND CERAM .07	10	
98	112		1300197-00	33.0 .25 W 5.0 % CC	1	R52
99	113		1302466-00	100.0 K .25 W 5.0 % CC	1	R53
100	114		1305255-00	121.0 K .25 W 1.0 % RN55D-F10	1	R38
101	115		1001765-00	.005 MFD 100V 20% Z5T DISC	1	C39
102	117		9006010-01	SCREW,MACH PAN PHIL 4-	3	
103	118		9009769-00	WASHER,RECTNGLR STEEL	1	
104	119		9006664-00	WASHER,FLAT SST	4	
105	120		9006563-00	NUT,KEP 8-32X 11/13AF	2	
106	121		1105796-01	5796-1PIV=400 I=1A D041	1	D26
107	122		1300285-00	270.0 .50 W 5.0 % CC	1	R55
108	123		1311867-00	.50 3.0 W 1.0 % WW	1	R56
109	124		9008264-00	MOUNT, CABLE TIE, ADHESIVE BACKE	1	
110	125		9007031-00	TIE,CABLE BUNDL.DIA 0- 3/4"=101	1	
111	126		9107278-09	TUBING,TEFLON .042ID	A/R	
112	127		1018980-00	6800.0 MMF 100V 1% MICA	1	C7
113	128		9107350-55	WIRE, 22AWG(07/30)IPVC 150V	A/R	
114	129		1312923-00	2.10 K .25 W 1.0 % RN55D-F10	1	R18
115	130		1210929-03	FUSE, SUB-MINI .750A, 125V, A	1	F1

116 NOTE: SEE E-UA-5412996-0-0 FOR ADDITIONAL INSERTION INFORMATION
117 NOTE: USE 1313191-00 UNTIL EXISTING STOCK HAS BEEN DEPLETED THEN USE 1317917-00.

DIGITAL	TITLE	SIZE	CODE	DOCUMENT NUMBER	REV
	H7831 POWER SUPPLY SECTION A OF A	K	PL	5412996-0-DBP	T

THIS DRAWING AND SPECIFICATIONS, HEREIN, ARE THE PROPERTY OF DIGITAL EQUIPMENT CORPORATION AND SHALL NOT BE REPRODUCED IN COPIES OR USED IN WHOLE OR IN PART AS THE BASIS FOR THE MANUFACTURE OR SALE OF ITEMS WITHOUT WRITTEN PERMISSION.
COPYRIGHT © 1977 , DIGITAL EQUIPMENT CORPORATION

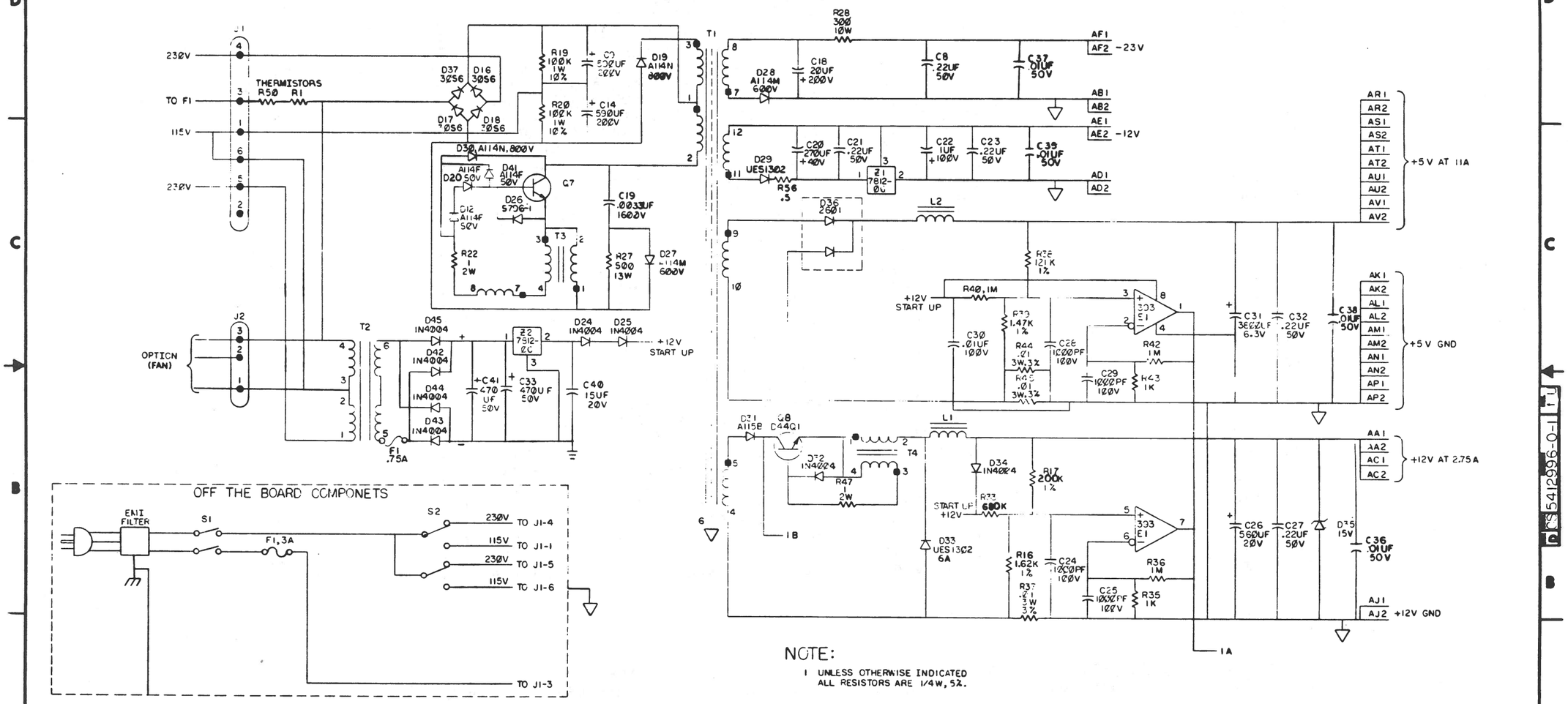

NOTE:

1 UNLESS OTHERWISE INDICATED ALL RESISTORS ARE 1/4W, 5%.

REVISIONS			
CODE	CHANGE NO.	REV.	
711	5412996-PN001	C	J. BITTO
	5412996-PN002	D	J. BITTO (J.C.)
	5412996-PN003	E	L. KING
	5412996-PN004	F	J. BITTO
	5412996-PN005	H	J. BITTO
	5412996-ML004	J	E. JAMES
	5412996-ML005	K	G. CHRISTIANSEN
	5412996-ML010	L	G. CHRISTIANSEN
	5412996-ML011	M	F. LEFEUR
	5412996-ML015	P	G. CHRISTIANSEN
	5412996-ML014	N	D. MOORE
	5412996-ML016	R	G. CHRISTIANSEN
	5412996-ML017	S	D. ST. SAUVEUR
	5412996-ML018	T	D. ST. SAUVEUR
	5412996-ML019	U	D. ST. SAUVEUR

DRN.		FIRST USED ON H7831
CHK'D		
ENGR		TITLE H7831 POWER SUPPLY
PROJ. ENG.		
PROD.		
NEXT HIGHER ASSY.	B-DD-5412996-0	SIZE D CODE CS NUMBER 5412996-0-1 REV. U
SCALE		
SHEET 1 OF 2		DIST.

D CS 5412996-0-1 U

"THIS DRAWING AND SPECIFICATIONS, HEREIN, ARE THE PROPERTY OF DIGITAL EQUIPMENT CORPORATION AND SHALL NOT BE REPRODUCED OR COPIED OR USED IN WHOLE OR IN PART AS THE BASIS FOR THE MANUFACTURE OR SALE OF ITEMS WITHOUT WRITTEN PERMISSION. COPYRIGHT © 1971 DIGITAL EQUIPMENT CORPORATION"

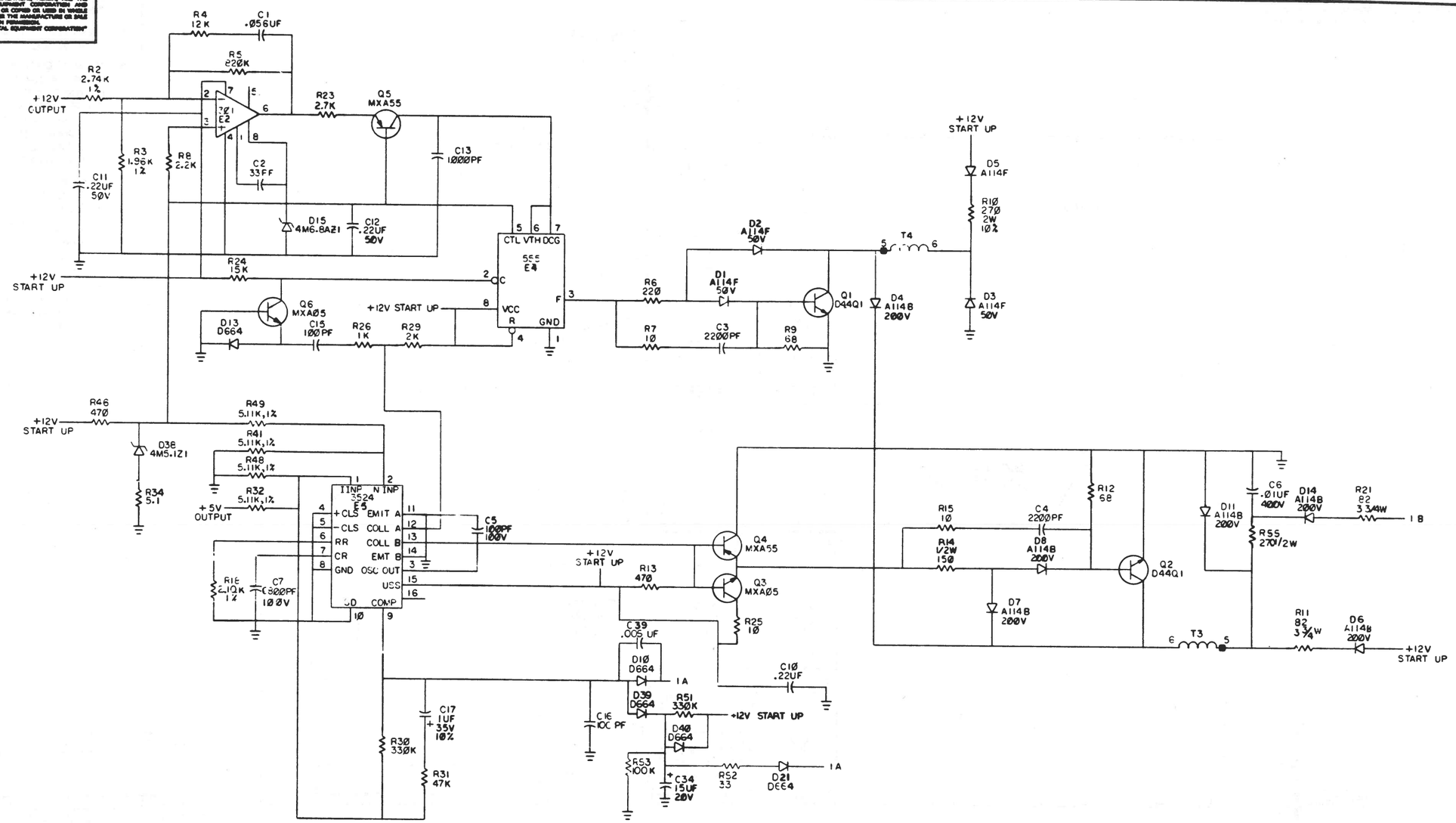

REVISIONS		
CHK	CHANGE NO.	REV.

TITLE	SIZE	CODE	NUMBER	REV.
H7831 POWER SUPPLY	D	CS	5412996-0-1	
SCALE —	SHEET 2 OF 2	DIST.		

"THIS DRAWING AND SPECIFICATIONS, HEREIN, ARE THE PROPERTY OF DIGITAL EQUIPMENT CORPORATION AND SHALL NOT BE REPRODUCED OR COPIED OR USED IN WHOLE OR IN PART AS THE BASIS FOR THE MANUFACTURE OR SALE OF ITEMS WITHOUT WRITTEN PERMISSION.
COPYRIGHT © 1977 , DIGITAL EQUIPMENT CORPORATION"

NOTES:

1. CONNECT PLUG FROM ITEM 1 (7015055-0-0) TO J2 ON ITEM 2 (5412996).
2. INSTALL ITEM 3 AS SHOWN, TYP. 4 PLACES.
3. IDENTIFICATION: STAMP USING 1/8" CHARACTER HEIGHT AS INDICATED BELOW TO HIGHEST LEVEL OF SUBASSEMBLY SPECIFIED ON PURCHASE ORDER AND LOCATE APPROX AS SHOWN ON DRAWING.
   A.) PART NUMBER
   B.) REVISION
   C.) VENDOR IDENTIFICATION.
4. LOCATE ITEM NO. 4/5 APPROX AS SHOWN.
5. ADD CSA LABEL 3613211-01 FOR ALL FAR EAST BUILT UNITS AS DIRECTED BY CORPORATE PRODUCT SAFETY. LABEL TO BE LOCATED UNDER SERIAL LABEL.
6. FOR INDIVIDUAL FIELD SERVICE OR CUSTOMER SPARES SHIPMENTS USE PACKAGING INSTRUCTIONS A-SP-3700552-0-0; FOR BULK INTERPLANT SHIPMENTS USE PACKAGING INSTRUCTION A-SP-3700437-0-0 VARIATION - ØØ

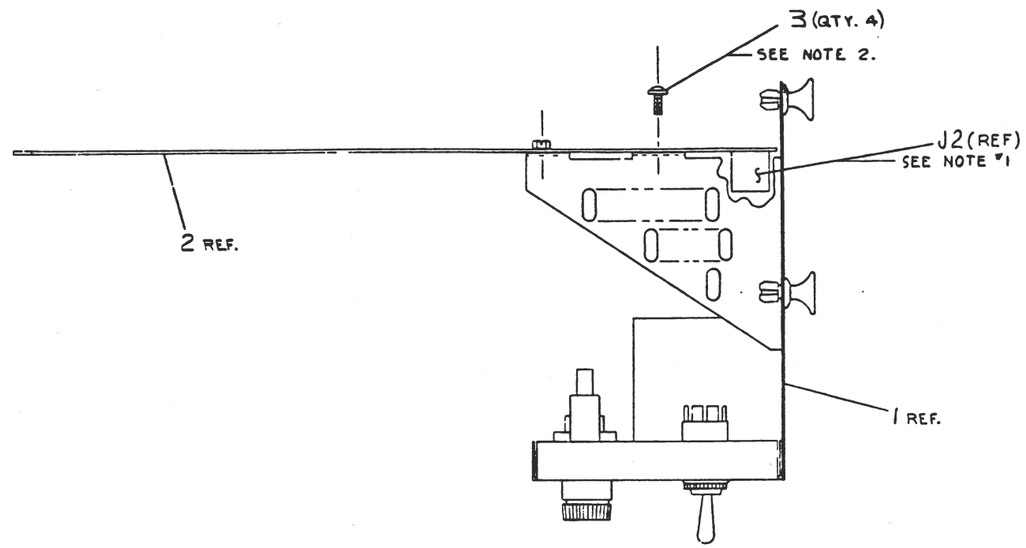

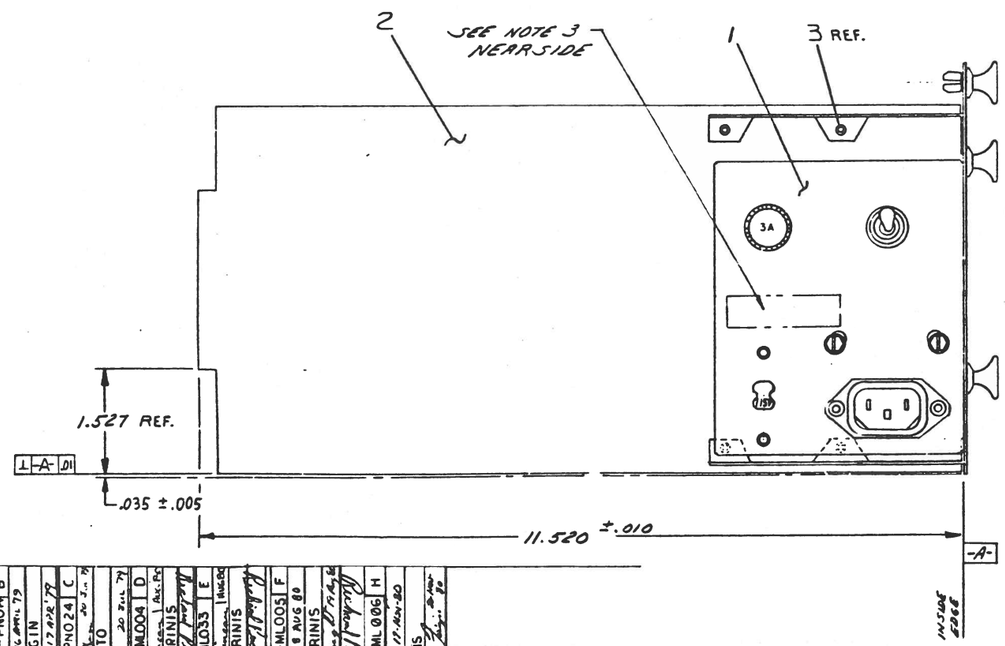

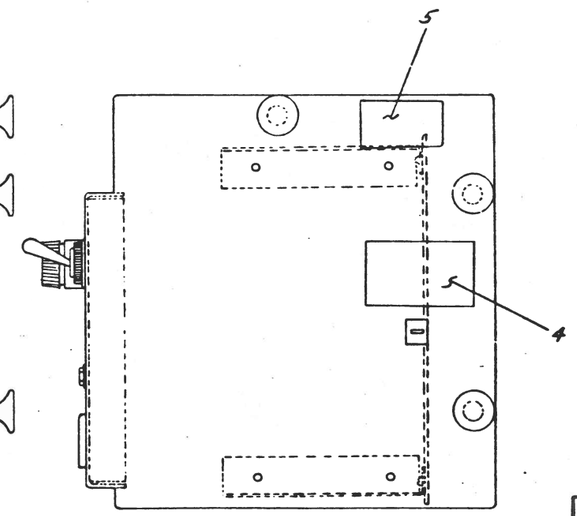

CAUTION: OFF SHEET PARTS LIST EXIST.
REFER TO K-PL-7014979-0-DBP

REV.	CHANGE NO.	CHK.	
A	7014979-ML001		
B	VT100-PN014		J. DEMARINIS
C	VT100-PN024		J. BITTO
D	7014979-ML004		J. DEMARINIS
E	VT100-ML033		J. DEMARINIS
F	7014979-ML005		J. DEMARINIS
H	7014979-ML006		J. DEMARINIS

QUANTITY & VARIATION	DESCRIPTION	DWG. PART NO.	ITEM NO.
THIRD ANGLE PROJECTION	UNLESS OTHERWISE SPECIFIED DIMENSIONS ARE IN INCHES		
REMOVE BURRS AND BREAK SHARP CORNERS	DRN. D. Bourdeau 9 SEP 77	FIRST USED ON VT1ØØ	digital
DO NOT SCALE DWG	CHK'D 2-OCT-77	TITLE PCWER SUPPLY ASSY.	
MATERIAL SEE PARTS LIST	ENG 3-OCT-77		
FINISH	PROJ. ENG. 12-10-77		
	PROD. 5-OCT-77		
	NEXT HIGHER ASSY. E-UA-VT1ØØ-0-0	SIZE D	CODE AD
	SCALE 1/1	NUMBER 7014979-0-0	REV. H
	SHEET 1 OF 1	DIST.	

1 ML

2 X-PLCS
41
39
27
40
39
41
5-X
PLCS
37
6.75 F.B.S.
(171.5 MM)
17.150 F.B.S.
(435.61 MM)
E14
E12
E10
E9
E8
E7
E6
E5
E4
E3
E2
E1
E13
E11
C1
C2
C3
C4
C5
C6
C7
C8
C9
R15
R16
R17
R18
R19
R20
R21
R22
R23
R24
R25
R26
R27
R28
R29
R30
R31
R32
R33
R34
R35
R36
R37
R38
R39
R40
R41
R42
R43
R44
R45
R46
R47
R48
R49
R50
R51
R52
R53
R54

5413404
5013403C-PI L1

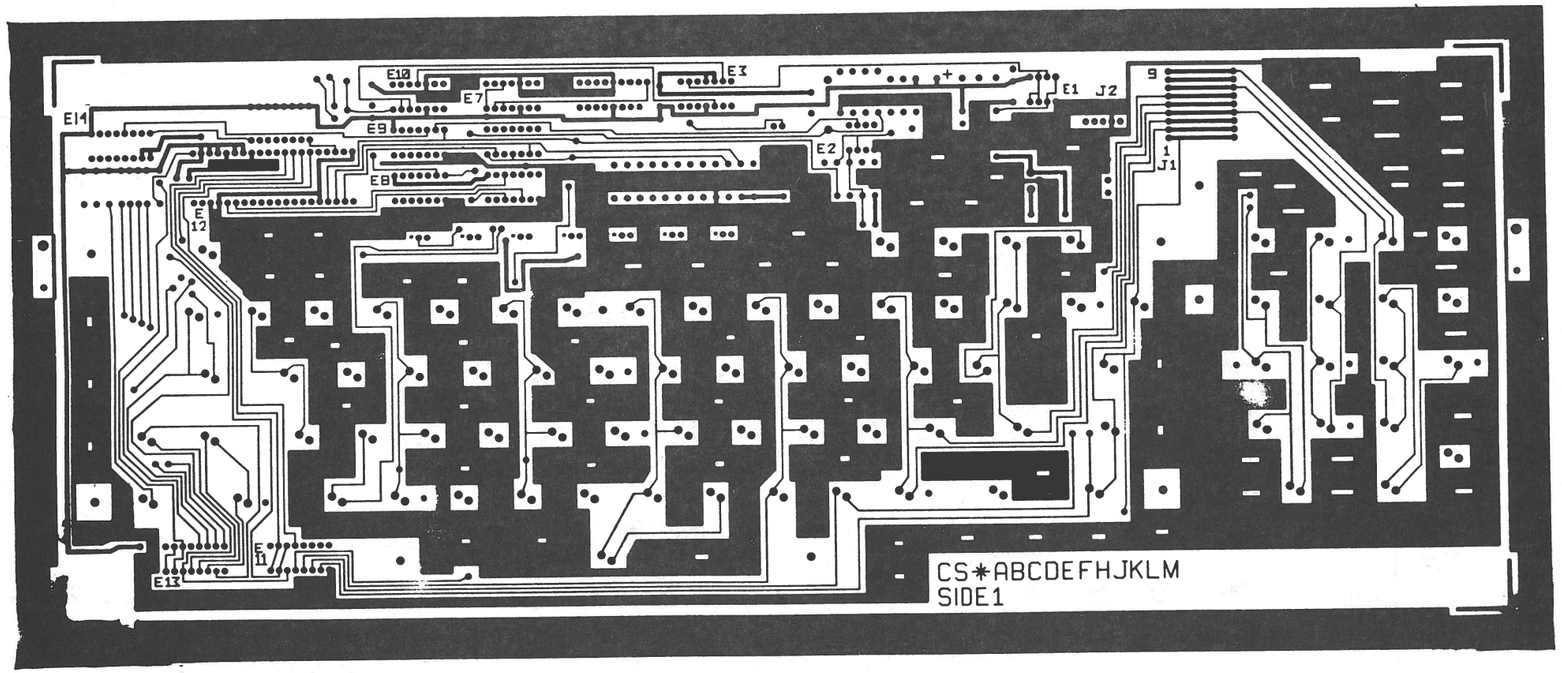

REVISIONS		
CHK	CHANGE NO.	REV

TITLE LK07 KEYBOARD

SCALE 2 : 1 SHEET 2 OF 3

SIZE/CODE E UA NUMBER 5413404-0-0 REV D

DIST

© 1979

L2

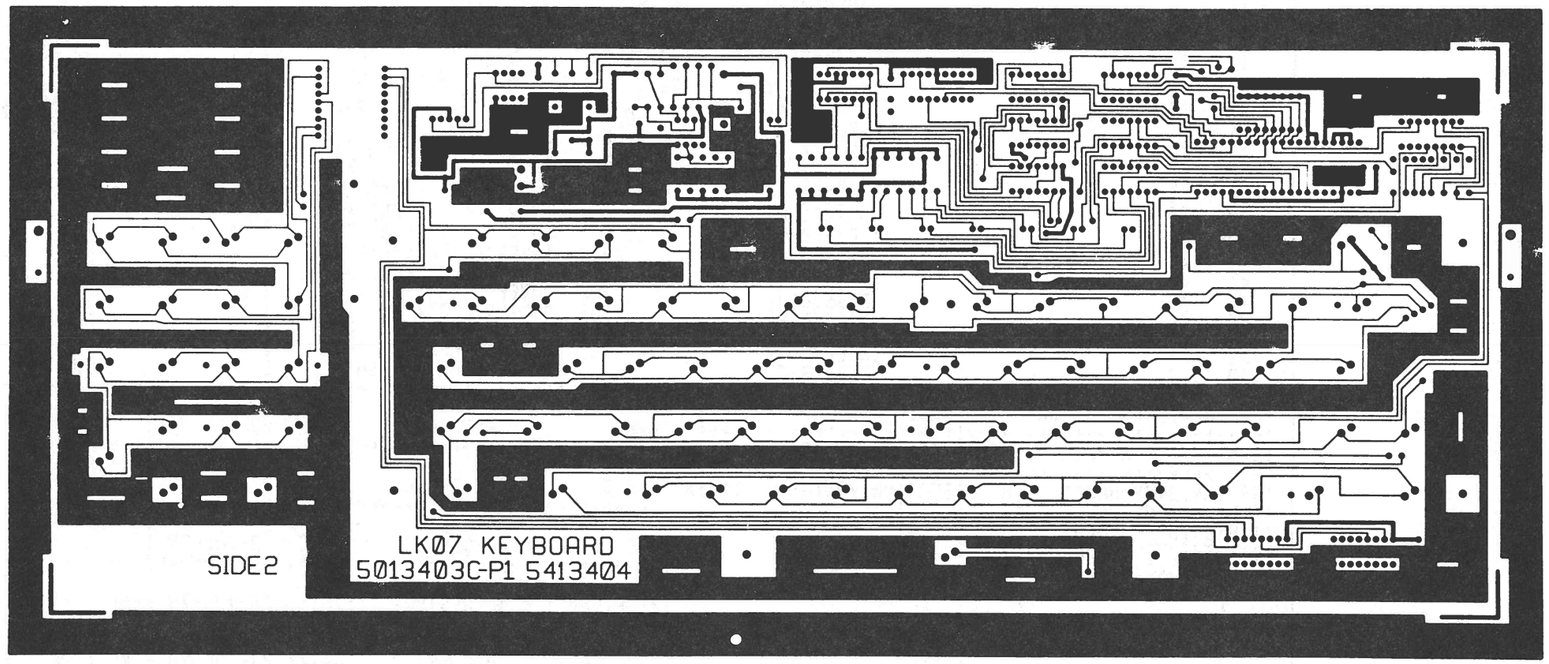

REVISIONS		
CHK	CHANGE NO.	REV

TITLE	SIZE/CODE	NUMBER	REV.
LK07 KEYBOARD	E UA	54134040-0	D
SCALE 2:1	SHEET 3 OF 3	DIST	

D 54134040-0

AUTOMATED BY PRTLST.3L(34)

P A R T S L I S T

LINE	ITEM	DOCUMENT NUMBER	PART NUMBER	DESCRIPTION	QTY PER VARIATION 00	REFERENCE DESIGNATOR
1	1	D-MD-5013403-0-0	5013403-00	DRILL & ETCH DRAWING	1	
2	2		1000014-00	68.0 MMF 100V 5X200PPM MICA	1	C7
3	3		1000075-00	25 MFD 25V +75-10% AL EL	1	C5
4	4		1001634-00	1600.0 MMF 100V 5X200PPM MICA	1	C6
5	5		1005306-00	6.8MFD 35V 10% S.TANT	1	C8
6	6		1012784-00	.047 MFD 50V +80-20% CER	6	C1,C2,C4,C9-C11
7	7		1105275-00	D 672 TR= 15NS PIV= 60V SI	1	D8
8	8		1110324-01	LED 1MCD@10MA PIV=3 .750 MIN. LE	7	D1-D7
9	9		1215048-00	CONN 5POS RT ANGLE	1	J2
10	10		1300309-00	390.0 .25 W 5.0 % CC	2	R16,R42
11	11		1300315-00	470.0 .50 W 5.0 % CC	1	R15
12	12		1300365-00	1.0 K .25 W 5.0 % CC	6	R10,R19,R21-R24
13	13		1300439-00	3.30 K .25 W 5.0 % CC	9	R26-R33,R38
14	14		1300479-00	10.0 K .25 W 5.0 % CC	11	R2,R3,R17,R25,R34-R37,R39-R41
15	15		1301401-00	750.0 .25 W 5.0 % CC	1	R1
16	16		1301425-00	300.0 .25 W 5.0 % CC	2	R18,R20
17	17		1301874-00	5.60 K .25 W 5.0 % CC	3	R5,R7,R9
18	18		1302391-00	20.0 K .25 W 5.0 % CC	2	R4,R6
19	19		1303155-00	21.50 K .25 W 1.0 % RN55D-F10	1	R12
20	20		1303187-00	820.0 K .25 W 5.0 % CC	1	R8
21	21		1303312-00	10.0 K .25 W 1.0 % RN55D-F10	1	R11
22	22		1304833-00	1.96 K .25 W 1.0 % RN55D-F10	1	R14
23	23		1309412-00	18.20 K .25 W 1.0 % RN55D-F10	1	R13
24	24		1909686-00	7404 INVERTER GATE-HEX 1I	1	E9
25	25		1910406-00	75451 DRIVER,PERIPH,DUAL,	1	E1
26	26		1910741-00	7406 INVERTER GATE-HEX 1I	1	E8
27	27		1912536-01	7805 VOLT REG,FIX +5V	1	Z1
28	28		1912649-00	LS75 LATCH 4BIT,BISTABLE	1	E4
29	29		1912799-00	LS00 NAND-GATE-QUAD 2IN,P	1	E5
30	30		1912823-00	LS73 FF-JK DUAL W/CLEAR	1	E3

REVISION HISTORY			BASIC PART NO: 5413404
ENG	ECO NUMBER	REV	SECTION A OF A
RP	5413404-ML001	B	SECTION.VARIATION INDEX
J.D	5413404-PN002	C	[A] 00
J.B	5413404-PN003	D	[B]
CJ	5413404-ML004	E	[C]
CJ	5413404-ML005	F	[D]
			[E]
			[F]
			[H]
			[J]
			[K]
			[L]
			[M]
			[N]

DRN: T SHETRAWSKI — DATE: 23-JUL-79

CHK'D: T SHETRAWSKI — DATE: 23-JUL-79

DES.ENG: M MORGESTERN — DATE: 23-JUL-79

RESP.ENG.: M MORGESTERN — DATE: 23-JUL-79

MFG.ENG.: T CORCIARI — DATE: 23-JUL-79

ASSEMBLY NUMBER: D-UA-5413404-0-0

TOP DOCUMENT NUMBER:

D I G I T A L

TITLE PARTS LIST

VT100 FULL KEYBOARD

DOCUMENT NUMBER

SIZE	CODE	NUMBER	REV
K	PL	5413404-0-DBP	F

FILE NAME: Z0783F.PLS

EDIT # 11

"THIS DRAWING AND SPECIFICATIONS HEREIN, ARE THE PROPERTY OF DIGITAL EQUIPMENT CORPORATION AND SHALL NOT BE REPRODUCED OR COPIED OR USED IN WHOLE OR IN PART AS THE BASIS FOR THE MANUFACTURE OR SALE OF ITEMS WITHOUT WRITTEN PERMISSION.
COPYRIGHT (C) 1981. DIGITAL EQUIPMENT CORPORATION "

AUTOMATED BY PRTLST.3L(34)

P A R T S L I S T

LINE	ITEM	DOCUMENT NUMBER	PART NUMBER	DESCRIPTION	QTY PER VARIATION 00	REFERENCE DESIGNATOR
31	31		1912824-00	LS74 FF-D DUAL,EDGE TRIGG	1	E6
32	32		1912844-00	LS151 MUX 1 OF 8 & DATA	1	E14
33	33		1913949-00	LS93 COUNTER,DECADE,4BIT	2	E7,E10
34	34		1913950-00	LS156 DECODER,2 OF 4(DUAL)	2	E11,E13
35	35		1914156-00	LM 393 VOLT.COMPARATOR DUAL	1	E2
36	36		2114137-51	UART MOS N-CHANNEL	1	E12
37	37		7013910-00	KEYBOARD ARRAY ASSY	1	
38	38		7014561-00	18 KEY NUMERIC PAD ASSY	1	
39	39		9006020-01	SCREW,PAN,PHIL 6-32X 1/4 SS	1	
40	40		9008185-00	NUT,KEP 6-32X1/4 AF	1	
41	41		9010033-00	SCREW,PAN,PHILLIPS, 4-24 X 3/8	7	
42	42		1012312-01	.47 MFD 50V +80-20% CER	1	C3

D	I	G	I	T	A	L	TITLE VT100 FULL KEYBOARD	SECTION A OF A	SIZE K	CODE PL	DOCUMENT NUMBER 5413404-0-DBP	REV F

"THIS DRAWING AND SPECIFICATIONS, HEREIN, ARE THE PROPERTY OF DIGITAL EQUIPMENT CORPORATION AND SHALL NOT BE REPRODUCED OR COPIED OR USED IN WHOLE OR IN PART AS THE BASIS FOR THE MANUFACTURE OR SALE OF ITEMS WITHOUT WRITTEN PERMISSION. COPYRIGHT © 1977, DIGITAL EQUIPMENT CORPORATION"

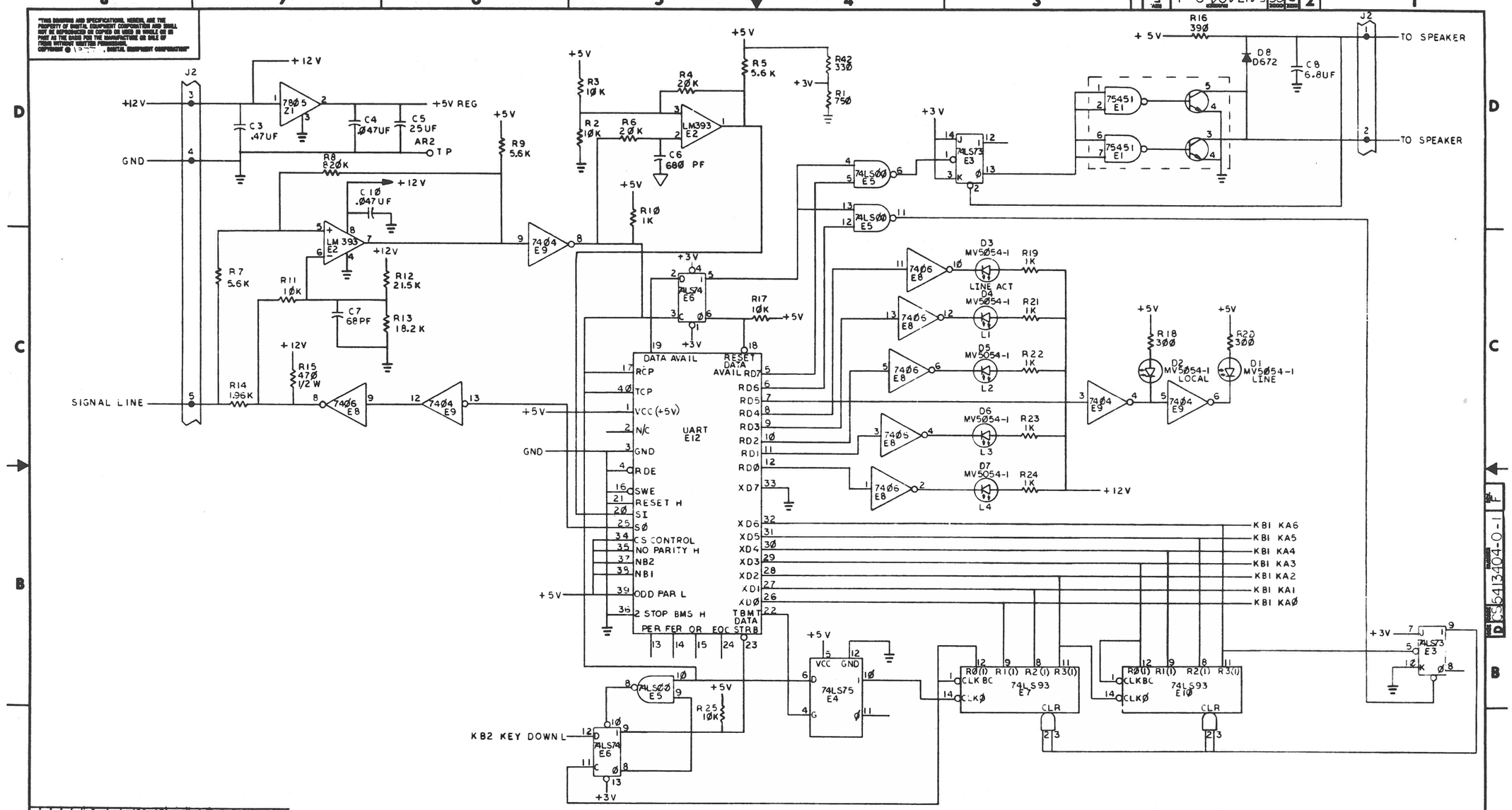

REVISIONS			
CHG.	CHANGE NO.	REV.	
	ML0001	B	P. NICHOLLS R. PUCCI
	5413404-PN002	C	
	5413404-ML0005	D	J. DESUK
	08-15-1		C. JAMES
	5413404-ML0006	E	
	5413404-ML0007	F	R. PUCCI
			AL CLARK

DRN.		29 NOV 77
CHK'D		
ENG.		12 MAY 78
PROJ. ENG.		12 MAY 78
PROD.		6/13/78
NEXT HIGHER ASSY.	D-DD-5413404-0-0	
SCALE	—	
SHEET	1 OF 3	

FIRST USED ON: VT100

digital

TITLE: VT100 FULL KEYBOARD (KBI)

SIZE	CODE	NUMBER	REV.
D	CS	5413404-0-1	F

DIST.

"THIS DRAWING AND SPECIFICATIONS, HEREIN, ARE THE PROPERTY OF DIGITAL EQUIPMENT CORPORATION AND SHALL NOT BE REPRODUCED OR COPIED OR USED IN WHOLE OR IN PART AS THE BASIS FOR THE MANUFACTURE OR SALE OF ITEMS WITHOUT WRITTEN PERMISSION.
COPYRIGHT © 1977 DIGITAL EQUIPMENT CORPORATION"

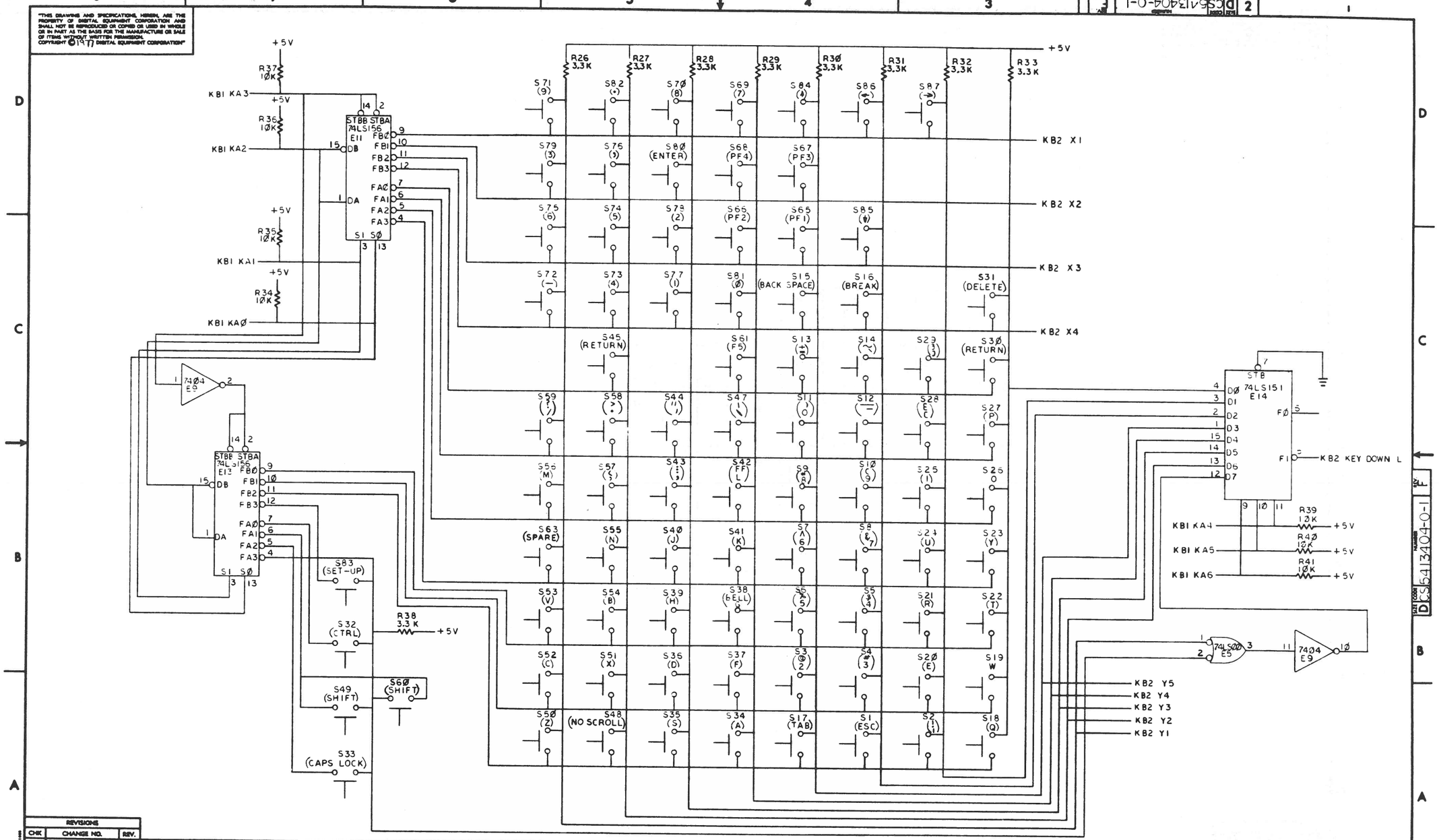

REVISIONS		
CHK	CHANGE NO.	REV.

TITLE: VT100 FULL KEYBOARD (KB2)

SIZE: D | CODE: CS | NUMBER: 5413404-0-1 | REV. F

SCALE: —/— | SHEET 2 OF 3 | DIST.

"THIS DRAWING AND SPECIFICATIONS, HEREIN, ARE THE PROPERTY OF DIGITAL EQUIPMENT CORPORATION AND SHALL NOT BE REPRODUCED OR COPIED OR USED IN WHOLE OR IN PART AS THE BASIS FOR THE MANUFACTURE OR SALE OF ITEMS WITHOUT WRITTEN PERMISSION.
COPYRIGHT ©1977, DIGITAL EQUIPMENT CORPORATION"

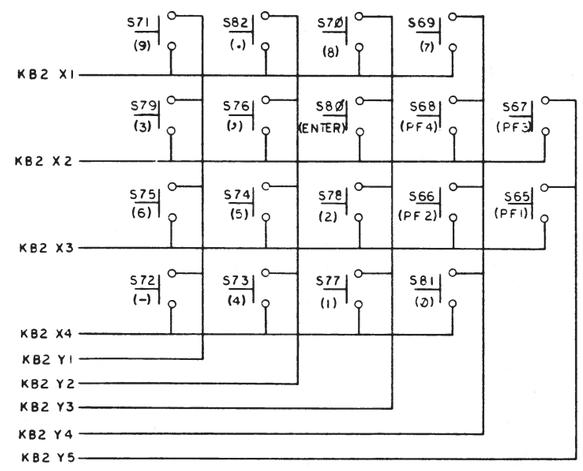

REVISIONS		
CHK	CHANGE NO.	REV.

TITLE	SIZE	CODE	NUMBER	REV.
VT100 FULL KEYBOARD (KB3)	D	CS	5413404-0-1	F
SCALE —/—/— SHEET 3 OF 3	DIST.			

SIZE D CODE CS NUMBER 5413404-0-1 REV. F

"THIS DRAWING AND SPECIFICATIONS, HEREIN, ARE THE PROPERTY OF DIGITAL EQUIPMENT CORPORATION AND SHALL NOT BE REPRODUCED OR COPIED OR USED IN WHOLE OR IN PART AS THE BASIS FOR THE MANUFACTURE OR SALE OF ITEMS WITHOUT WRITTEN PERMISSION. COPYRIGHT © 1978 DIGITAL EQUIPMENT CORPORATION"

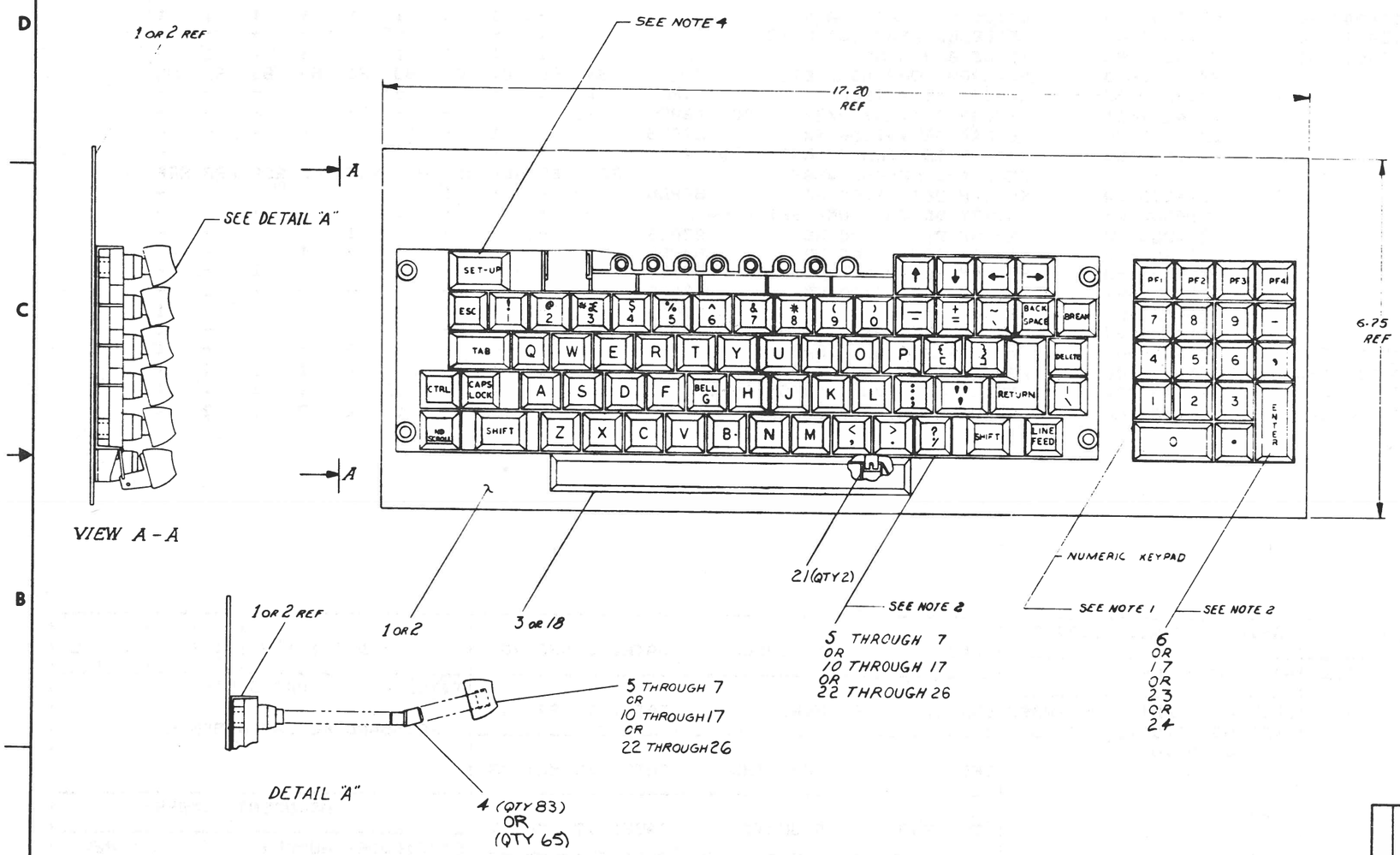

NOTES:

1. THE NUMERIC KEY PAD IS NOT AVAILABLE ON THE E-UA-5413404-01 VARIATION.
2. STANDARD VT100 BASIC KEYCAP SET (12/4333-72, ITEM 5) AND NUMERIC PAD (12/4333-91, ITEM 6) SHOWN. FOR KEYCAP ARRANGEMENTS REFER TO DEC DRAWING NUMBER D-AR-7015765-0-1.
3. FOR INDIVIDUAL FIELD SERVICE/CUSTOMER SPARES SHIPMENTS, USE PACKAGING INSTRUCTIONS A-SP-3700555-0-0; FOR BULK INTERPLANT SHIPMENTS, USE PACKAGING INSTRUCTIONS A-SP-3700439-00 VARIATION -00.
4. INSTALL PLUNGER BELOW THIS KEY ON HOBIS KEYCAP SET 12/4333-K2. ALSO, FOR KEYCAP ARRANGEMENTS REFER TO DEC DRAWING D-AR-7015765-0-1.

OFFSHEET PARTS LIST EXISTS
REFER TO K-PL-7015765-0-DBP

CHK	CHANGE NO.	REV
RR	7015765-ML001	A
W. WEDEKING 15 SEPT 78		
RR	7015765-ML002	B
L. KING		
R. Pacci 1-3-79		
VT100-PN026		C
E.C. JAMES		
VT100-ML028		D
C. JAMES		
VT100-ML032		E
J. DEMARINIS		
7015765-ML005		F
J DEMARINIS 08-27-81		
7015765-ML006		H
J. DEMARINIS		
7014653-ML006		J
G. BOURQUE		

QUANTITY & VARIATION	
THIRD ANGLE PROJECTION	
REMOVE BURRS AND BREAK SHARP CORNERS	
DO NOT SCALE DWG	
MATERIAL	SEE PARTS LIST
FINISH	NONE

DESCRIPTION	DWG./PART NO.	ITEM NO.
UNLESS OTHERWISE SPECIFIED DIMENSIONS ARE IN INCHES		
ANGLES ±0° 30'	CLASS OF ACCURACY	NOMINAL DIMENSION RANGE INCHES: OVER 0 TO 0.3; OVER 0.3 TO 1.2; OVER 1.2 TO 4.8; OVER 4.8 TO 12.0; OVER 12.0 TO 48.0; OVER 48.0 TO 60.0
SURFACE QUALITY IN MICROINCHES	CHECK ONE: MEDIUM ✓	±.004 ±.008 ±.013 ±.016 ±.024 ±.04
	PREFERRED	±.012 ±.016 ±.025 ±.04 ±.060 ±0.1

DRN. [illegible] 3 APR 78
CHK'D [illegible] 3 APR 78
ENG. [illegible] 10 MAY 78
PROJ. ENG. [illegible]
PROD. [illegible] 5-10-78
NEXT HIGHER ASSY. B-DD-7015765-0
SCALE NONE
SHEET 1 OF 1

FIRST USED ON VT100

digital

TITLE KEY BOARD / KEY CAP ASSY

SIZE	CODE	NUMBER	REV.
D	AD	7015765-0-0	J

DIST.

MLR

AUTOMATED BY PRTLST.3P(44)

P A R T S L I S T

LINE	ITEM	DOCUMENT NUMBER	PART NUMBER	DESCRIPTION		QUANTITY PER VARIATION 00	01	02	03	04	05	06	07	08	09
1	1	E-AD-5413404-0-0	5413404-00	VT100 FULL KEYBOARD		1	-	1	1	1	1	1	1	1	1
2	2	E-AD-5413404-0-0	5413404-01	KEYBOARD ASSY (64 KEYS)		-	1	-	-	-	-	-	-	-	-
3	3	C-AD-7015050-0-0	7015050-00	SPACE BAR ASSY		1	1	1	1	1	1	1	1	1	-
4	4		1214332-00	SW,ARRAY CAP ADAPTER		83	65	83	83	83	83	83	83	83	83
5	5		1214333-72	KEYCAP SET,VT100	64PCS	1	1	-	-	-	-	-	-	-	-
6	6		1214333-91	KEYCAP SET,LA120/34 VT100	18PCS	1	-	-	-	-	-	-	-	-	-
7	7		1214333-C0	KEYCAP SET,VT100-NA	82PCS	-	-	1	-	-	-	-	-	-	-
8	8		7420120-00	*** THIS ITEM IS NOT USED ***		-	-	-	-	-	-	-	-	-	-
9	9	D-AR-7015765-0-1		KEYBOARD/KEYCAP ASSY		REF	REF	REF	REF	REF	REF	REF	REF	REF	REF
10	10		1214333-J0	KEYCAP SET,VT100-WA	82PCS	-	-	-	1	-	-	-	-	-	-
11	11		1214333-W2	SW,KEY BD CAP COMP SET U3-W1		-	-	-	-	1	-	-	-	-	-
12	12		1214333-CP	KEYCAP SET,VT100-WB	82PCS	-	-	-	-	-	1	-	-	-	-
13	13		1214333-CB	KEYCAP SET,VT100-WB	82PCS	-	-	-	-	-	-	1	-	-	-
14	14		1214333-8U	KEYCAP SET,VT100-WB	82PCS	-	-	-	-	-	-	-	1	-	-
15	15		1214333-EY	KEYCAP SET,VT100-WB	82PCS	-	-	-	-	-	-	-	-	1	-
16	16		1214333-2Y	KEYCAP SET,VT100	64PCS	-	-	-	-	-	-	-	-	-	1
17	17		1214333-3W	KEYCAP SET,LA120/34 VT100	18PCS	-	-	-	-	-	-	-	-	-	1
18	18	D-AD-7015050-0-0	7015050-01	SPACE BAR ASSY. GRAY		-	-	-	-	-	-	-	-	-	1
19	19	A-SP-3700555-0-0	3700555-00	PKG KEYBOARD 7015765		1	1	1	1	1	1	1	1	1	1
20	20	A-SP-3700439-0-0	3700439-00	INSTR PKG. BULK CARTON 99-06476-		1	1	1	1	1	1	1	1	1	1
21	21	C-MD-7424160-0-0	7424160-00	SPACE BAR EQUALIZER CLIP		2	2	2	2	2	2	2	2	2	2

REVISION HISTORY			BASIC PART NO: 7015765		
ENG	ECO NUMBER	REV	SECTION A OF A		
---	INITIAL	F	SECTION. VARIATION INDEX	CHK'D: D. HEALY	DATE: 7 APR 78
JD	7015765-ML005	F	[A] 00,01,02,03,04,05, 06,07,08,09		
JD	7015765-ML006	H			
			[B]	DES.ENG.: E. WEDEKING	DATE: 10 MAY 78
			[C]	RESP.ENG.: G. DOUMANI	DATE: 17 MAY 7
			[D]		
			[E]	MFG.ENG.: K. HOFFMAN	DATE: 10 MAY 78
			[F]	ASSEMBLY NUMBER: D-AD-7015765-0-0	TOP DOCUMENT NUMBER: #B-DD-7015765-0

DRN: ANGEL COLON — DATE: 3 APR 78

D I G I T A L

TITLE: PARTS LIST

KEYBOARD/KEYCAP ASSEMBLY

SIZE	CODE	DOCUMENT NUMBER	REV
K	PL	7015765-0-DBP	H

FILE NAME: Z1933H.PLS — EDIT #: 6

"THIS DRAWING AND SPECIFICATIONS HEREIN, ARE THE PROPERTY OF DIGITAL EQUIPMENT CORPORATION AND SHALL NOT BE REPRODUCED OR COPIED OR USED IN WHOLE OR IN PART AS THE BASIS FOR THE MANUFACTURE OR SALE OF ITEMS WITHOUT WRITTEN PERMISSION. COPYRIGHT (C) 1981. DIGITAL EQUIPMENT CORPORATION "

THIS DRAWING AND SPECIFICATION, DESIGN, ARE THE PROPERTY OF DIGITAL EQUIPMENT CORPORATION. COPYRIGHT © 1978 DIGITAL EQUIPMENT CORPORATION

NOTES:
1. EXCEPT AS OTHERWISE NOTED, THE FOLLOWING TABLE (SHEET 2) LISTS VARIATION NUMBERS FOR 1214333 (KEYCAPS) INDICATING THE SPECIFIC KEYBOARD POSITION OF EACH AS USED ON VARIOUS MODELS.

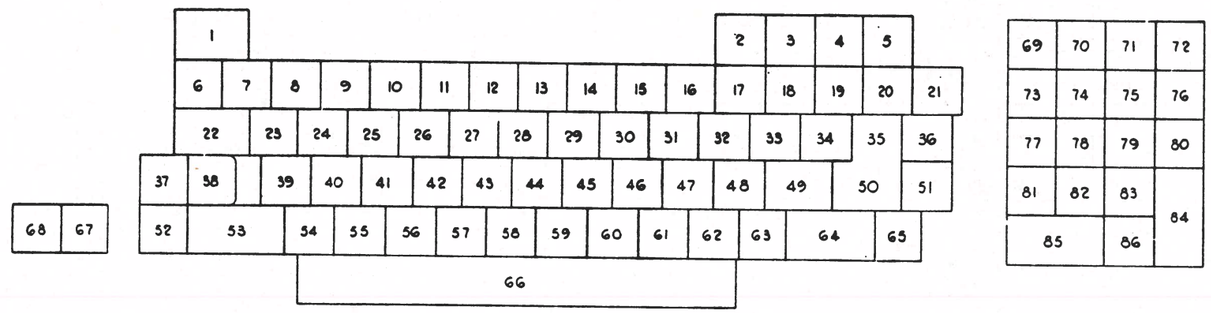

KEYBOARD CAP POSITIONS
(SEE NOTE 1 & TABLE, SHEET 2)

REVISIONS			
CHG	CHANGE NO.	REV.	
	7015765-ML002	A	L. KING
	VT100-PN025	B	E. C. JAMES
	VT103-ML028	C	E. JAMES
	VT100-ML032	D	J. DEMARINIS
	7015765-ML003	E	J. DEMARINIS
	7015765-ML004	F	F. HARNDEN
	7014695-ML006	H	G. BOURQUE
	7015765-ML007	J	J. DEMARINIS

QUANTITY & VARIATION	DESCRIPTION	DWG./PART NO.	ITEM NO.
	UNLESS OTHERWISE SPECIFIED DIMENSIONS ARE IN INCHES		
THIRD ANGLE PROJECTION	DRN.	28 JUN 78	FIRST USED ON VT100
REMOVE BURRS AND BREAK SHARP CORNERS	CHK'D	28 June 78	TITLE KEYBD CAP-POSITION ARRANGEMENT
DO NOT SCALE DWG	ENG.	28 June 78	
	PROJ.	28-JUN-78	
	PROD.	21 JUN 78	
	NEXT HIGHER ASSY.	D-AD-7015765-0-0	SIZE D, CODE AR, NUMBER 7015765-0-1, REV. J
MATERIAL	SCALE NONE		
FINISH	SHEET 1 OF 2		DIST.

ML3

"THIS DRAWING AND SPECIFICATIONS, HEREIN, ARE THE PROPERTY OF DIGITAL EQUIPMENT CORPORATION AND SHALL NOT BE REPRODUCED OR COPIED OR USED IN WHOLE OR IN PART AS THE BASIS FOR THE MANUFACTURE OR SALE OF ITEMS WITHOUT WRITTEN PERMISSION. COPYRIGHT © 1978 DIGITAL EQUIPMENT CORPORATION"

KEYCAP VARIATION (1214333-XX) POSITIONS (SEE NOTE 1, SHEET 1)

| KEYBOARD CAP-POSITIONS (SEE SHEET 1) | 1 | 2 | 3 | 4 | 5 | 6 | 7 | 8 | 9 | 10 | 11 | 12 | 13 | 14 | 15 | 16 | 17 | 18 | 19 | 20 | 21 | 22 | 23 | 24 | 25 | 26 | 27 | 28 | 29 | 30 | 31 | 32 | 33 | 34 | 35/36 | 37 | 38 | 39 | 40 | 41 | 42 | 43 | 44 | 45 | 46 | 47 | 48 | 49 | 51 | 52 | 53 | 54 | 55 | 56 | 57 | 58 | 59 | 60 | 61 | 62 | 63 | 64 | 65 | 67 | 68 | 69 | 70 | 71 | 72 | 73 | 74 | 75 | 76 | 77 | 78 | 79 | 80 | 81 | 82 | 83 | 84 | 85 | 86 |
|---|---|---

"THIS DRAWING AND SPECIFICATIONS, HEREIN, ARE THE PROPERTY OF DIGITAL EQUIPMENT CORPORATION AND SHALL NOT BE REPRODUCED OR COPIED OR USED IN WHOLE OR IN PART AS THE BASIS FOR THE MANUFACTURE OR SALE OF ITEMS WITHOUT WRITTEN PERMISSION. COPYRIGHT © 1977 , DIGITAL EQUIPMENT CORPORATION"

WIRE TABLE

	ITEM NO	DESCRIPTION AWG	COLOR	FROM CONN.	FROM WITH	TO CONN	TO WITH	REMARKS	PRECUT WIRE LG FOR VAR-00	PRECUT WIRE LG FOR VAR-01 & -03	PRECUT WIRE LG FOR VAR-02
	5	18	RED	P1-22	14	P2-18	14		12.5 ± .50	12.5 ± .50	14.5 ± .50
			RED	P1-21		P2-17					
			RED	P1-20		P2-16					
			RED	P1-19		P2-15					
			RED	P1-18		P2-14					
			BLK	P1-17		P2-13					
			BLK	P1-16		P2-12					
			BLK	P1-15		P2-11					
			BLK	P1-14		P2-10					
	5		BLK	P1-13	14	P2-9			12.5 ± .50	12.5 ± .50	14.5 ± .50
FOR VAR -01,-02,-03	10		GRN	P5	9	P2-8		GRD. FOR VAR -01,-02 & -03		2.75 ± .25	2.75 ± .25
	5		YEL	P1-11	14	P2-7			12.5 ± .50	12.5 ± .50	14.5 ± .50
			RED	P1-10		P2-6					
			BLUE	P1-9		P2-5					
			BLK	P1-8		P2-4					
	5		ORG	P1-7		P2-3			12.5 ± .50	12.5 ± .50	14.5 ± .50
	6		WHT	P1-4		P3-9			19.5 ± .50	19.5 ± .50	20.5 ± .50
			GRY	P1-3		P3-8					
			GRN	P1-2		P3-10					
	6		YEL	P1-1	14	P3-6			19.5 ± .50	19.5 ± .50	20.5 ± .50
	10		GRN	P4	9	P3-5		GRD.	2.75 ± .25	2.75 ± .25	2.75 ± .25
	6		ORG	P2-1	14	P3-7			19.5 ± .50	19.5 ± .50	20.5 ± .50
	6	18	BLK	P2-2	14	P3-1	14		19.5 ± .50	19.5 ± .50	20.5 ± .50
FOR VAR -00	5	18	BLK	P1-12	14	P2-8	14	FOR VAR-00	12.5 ± .50		

OVER ALL CABLE LG.

VARIATION	DIM A	DIM B
7014978-00	19.50 ± .50	12.50 ± .50
7014978-01	19.50 ± .50	12.50 ± .50
7014978-02	20.50 ± .50	14.50 ± .50
7014978-03	19.50 ± .50	12.50 ± .50

NOTES:

1. IDENTIFICATION: DECAL USING 1/8" CHARACTER HEIGHT AS INDICATED BELOW TO HIGHEST LEVEL OF SUBASSEMBLY SPECIFIED ON PURCHASE ORDER AND LOCATE APPROX. AS SHOWN ON DRAWING.
   A.) PART NUMBER
   B.) REVISION
   C.) VENDOR IDENTIFICATION
   D.) DATE, CODE
2. ON VARIATION (-01,-02 & -03) CUT BACK BLK. WIRE FROM P2-8 TO P1-12 2.5 ± .25 IN. FROM BOTH ENDS.
3. CUT BACK ORN & BLK WIRES OF (ITEM #6) TO 12.5 ± .25 IN.
4. THE KEY PLUG IS ADDED BETWEEN PINS #5 & #6 OF P1 FOR VARIATION-03 ONLY.

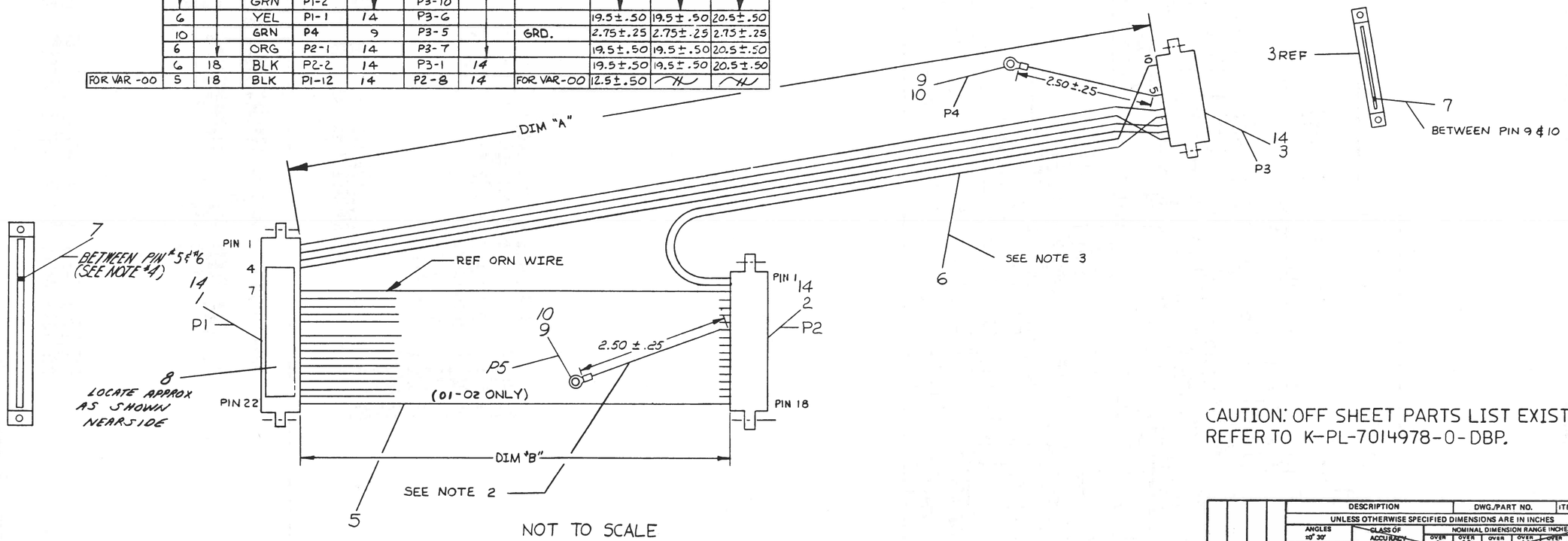

NOT TO SCALE

CAUTION: OFF SHEET PARTS LIST EXISTS
REFER TO K-PL-7014978-0-DBP.

CHK	CHANGE NO.	REV.
	7014978-ML001	A
	VT100-ML030	C
	7014978-ML003	E
	VT100-ML042	D
	7014978-PN002	B

REVISIONS

DRN.		9 DEC 77
CHK'D		25 APR 78
ENG.		19 MAY 78
PROJ. ENG.		27 MAY 78
PROD.		5-10-78

DESCRIPTION | DWG./PART NO. | ITEM NO.

UNLESS OTHERWISE SPECIFIED DIMENSIONS ARE IN INCHES

CLASS OF ACCURACY (CHECK ONE)	OVER 0 TO 0.2	OVER 0.2 TO 1.2	OVER 1.2 TO 4.0	OVER 4.0 TO 12.0	OVER 12.0 TO 40.0	OVER 40.0 TO 80.0
MEDIUM	±.005	±.008	±.012	±.016	±.024	±.04
PREFERRED	±.012	±.016	±.025	±.04	±.063	±0.1

ANGLES ±0° 30' — SURFACE QUALITY IN MICROINCHES

QUANTITY & VARIATION

THIRD ANGLE PROJECTION

REMOVE BURRS AND BREAK SHARP CORNERS

DO NOT SCALE DWG

NEXT HIGHER ASSY. E-UA-VT100-0-0

MATERIAL SEE PARTS LIST

FINISH —

SCALE NONE

SHEET 1 OF 1

FIRST USED ON VT100

digital

TITLE POWER CABLE ASSY

SIZE D | CODE IA | NUMBER 7014978-0-0 | REV. E

DIST.

MLB

THIS DRAWING AND SPECIFICATIONS, HEREIN, ARE THE PROPERTY OF BALL BROTHERS, INC., AND SHALL NOT BE REPRODUCED IN WHOLE OR IN PART AS THE BASIS FOR THE MANUFACTURE OR SALE OF ITEMS WITHOUT WRITTEN PERMISSION. COPYRIGHT © 1978 DIGITAL EQUIPMENT CORPORATION

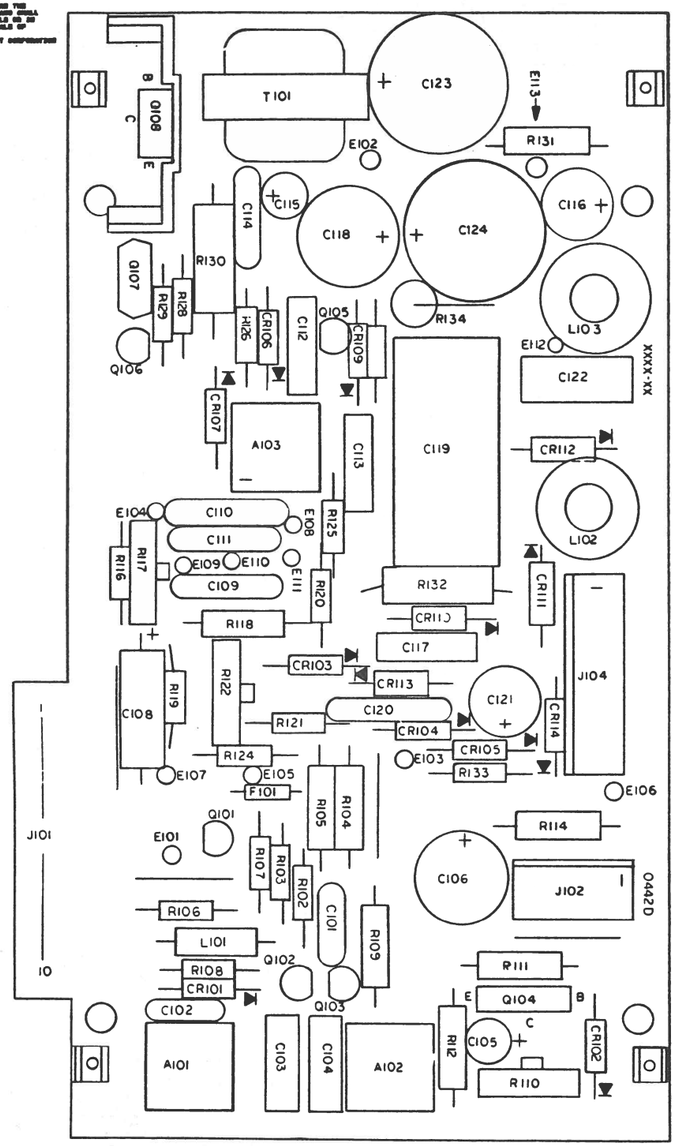

COPIED BY WRITTEN PERMISSION
OF BALL BROTHERS INC.

REF SYM	DESCRIPTION	PART NUMBER
RESISTOR, FIXED, CARBON, 5%, 1/4W UNLESS NOTED		
R101	47	70-16-0470
R102	30	70-16-0300
R103	47	70-16-0470
R104	220, 1/2W	1-011-2254
R105	820, 1/2W	1-011-2268
R106	470	70-16-0471
R107	360	70-16-0361
R108	100K	70-16-0104
R109	180, 1/2W	1-011-2252
R110	VAR; 250 20%, CO VERT HGT	70-89-0251
R111	12, 1/2W	1-011-2224
R112	15; 1/2W	1-011-2228
R113	NOT USED	
R114	1.5K; 1/2W	1-011-2274
R115	NOT USED	
R116	62K	70-16-0623
R117	100K, 20P	1-011-5435
R118	30K; 1/2W	1-011-2305
R119	9.1K	70-16-0912
R120	8.2M	70-16-0825
R121	100K	70-16-0104
R122	VAR; 2.5M 20%, CO FOC ADJ	1-011-5568
R123	NOT USED	
R124	510	70-16-0511
R125	1K	70-16-0102
R126	20K	70-16-0203
R127	3.3K	70-16-0332
R128	15K	70-16-0153
R129	2.4K	70-16-0242
R130	56 10; 3W, WW	1-011-2521
R131	1.2; 1/2W, CO	1-011-2520
R132	1.2 10%; 2W, WW	1-011-1395
R133	6.8K	70-16-0682
R134	1.8, 2W	1-011-2417
R135	NOT USED	
TRANSFORMER		
T2	HIGH VOLTAGE	6-003-0586
T101	HORIZ DRIVER	1-017-5402
MISCELLANEOUS		
	*CRT SOCKET	1-022-0427
	WIRE STRD GRN	1-038-0345
	HEATSINK	1-015-5059
	WIRE STRD BLU	1-038-0346
	WIRE STRD RED	1-038-0342
	CONTACT, FEMALE & 2	1-034-0362
	MCHSCR 6-32X1/4	3-011-0310
	NUT 6-32	3-012-0161
	LK WSHR #6	3-013-0160
	PWB	1-029-0442
	CONTACT, MALE	1-034-0295
	CONN SHELL, 1 CONT FEMALE	1-034-0323
WIRE TERMINATION DATA		
E103	CRT SOCKET YEL LEAD	
E105	CRT SOCKET BRN LEAD	
E107	CRT SOCKET BLK LEAD	
E108	CRT SOCKET RED LEAD	
E109	CRT SOCKET WHT LEAD	
E110	GRN WIRE 6.5 INCHES	
E111	CRT SOCKET ORN LEAD	
E112	BLUE WIRE, 10 INCHES	
E113	RED WIRE, 10 INCHES	

NOTES:
1. REFERENCE SCHEMATIC 1-024-0603
2. ALL REFERENCE SYMBOL NUMBERS 1 TO 99 ARE USED FOR ALL OFF BOARD COMPONENTS AND NUMBERS 100 TO 999 ARE USED FOR THE PWA COMPONENTS.
*. ALL PWA COMPONENTS PRECEDED WITH AN ASTERISK ARE NOT PART OF THE BASIC BOARD 6-200-0001.

PARTS LIST, TVX 120/DEC

REF SYM	DESCRIPTION	PART NUMBER
A101	RES TRIM, 60K, VERT HOLD	1-011-8008
A102	RES TRIM, 20K, VERT LIN	1-011-8005
A103	RES TRIM, 2.5K, VIDEO CENTER	1-011-8001
CAPACITOR, FIXED, UF UNLESS NOTED		
C101	270PF 5%, 500V, DM	1-012-0398
C102	.005 20%, 100V, CO	10-12-7508
C103	.22 10%, 100V, MY	1-012-2277
C104	.22 10%, 100V, MY	1-012-2277
C105	.68, 50V, E	1-012-2284
C106	470, 6.3V, E	1-012-2158
C107	NOT USED	
C108	22, 35V, E	1-012-1380
C109	.01 20%, 1000V, CO	1-012-2214
C110	.02 20%, 1000V, CO	1-012-2217
C111	.01 20%, 1000V, CO	1-012-2216
C112	.0022 10%, 630V, MY	1-012-2254
C113	.0047 20%, 630V, MY	1-012-2279
C114	.01 20%, 100V, CO	10-12-7209
C115	1, 50V, E	1-012-2189
C116	50, 50V, E	1-012-2157
C117	.047 20%, 250V, MY	1-012-2240
C118	220, 25V, E	1-012-2159
C119	10 10%, 100V, MY	1-012-2255
C120	.02 20%, 500V, CO	1-012-0780
C121	50, 50V, E	1-012-2157
C122	.022 10%, 250V, PP	1-012-2297
C123	10, 25V, ER	1-012-2273
C124	10, 28V, ER	1-012-2273
DIODE		
CR1	DD424	1-021-0424
CR101	DD410	1-021-0410
CR102	DD410	1-021-0410
CR103	DD410	1-021-0410
CR104	DD410	1-021-0410
CR105	DD410	1-021-0410
CR106	DD410	1-021-0410
CR107	DD410	1-021-0410
CR108	NOT USED	
CR109	DD410	1-021-0410
CR110	DD403	1-021-0403
CR111	DD458	1-021-0458
CR112	DD458	1-021-0458
CR113	DD403	1-021-0403
CR114	DD410	1-021-0410
FUSE		
F101	2A-125V PICO	1-028-0247
CONNECTORS		
J102	CONNECTOR, 4 PIN MALE	1-039-0148
J102	NOT USED	
J104	CONNECTOR, 7 PIN MALE	1-039-0145
COIL		
L1	VERTICAL CHOKE	6-003-0572
L2	DEFLECTION, TVX 120/12V	1-023-0248
L101	560UH	1-016-0302
L102	LINEARITY	1-016-0328
L103	WIDTH	1-016-0303
TRANSISTOR		
Q101	2N5830	1-015-1172
Q102	2N6027	1-015-1157
Q103	MPS-A65	1-015-1186
Q104	MJE3055	1-015-1156
Q105	2N4124	1-015-1139
Q106	2N4124	1-015-1139
Q107	MPS-U05	1-015-1159
Q108	BU407	1-015-1210

NOTES:
1) FLYBACK TRANSFORMER REPLACEMENT 3014590-01
2) PRINTED CIRCUIT BOARD REPLACEMENT 3014590-02

CHK	CHANGE NO	REV

ETCH REV.
P.C. DESIGN DATA BASE REV.

SIGNATURES	DATE
DRN.	8-18-78
CHK'D.	10-6-78
ENG. Richard Pierce	12-6-78
PROJ. ENG. Richard Pierce	12-6-78
PROD.	
SCALE	
SHT. 1 OF 2	
NEXT HIGHER ASSY.	

digital

TITLE SCHEMATIC TVX120/DEC 12 VOLT

SIZE	CODE	NUMBER	REV
D	CS	3014590-0-1	A

MS#180297

"THIS DRAWING AND SPECIFICATIONS HEREIN, ARE THE PROPERTY OF BALL BROTHERS INC AND SHALL NOT BE REPRODUCED OR COPIED OR USED IN WHOLE OR IN PART AS THE BASIS FOR THE MANUFACTURE OR SALE OF ITEMS WITHOUT WRITTEN PERMISSION. COPYRIGHT ©

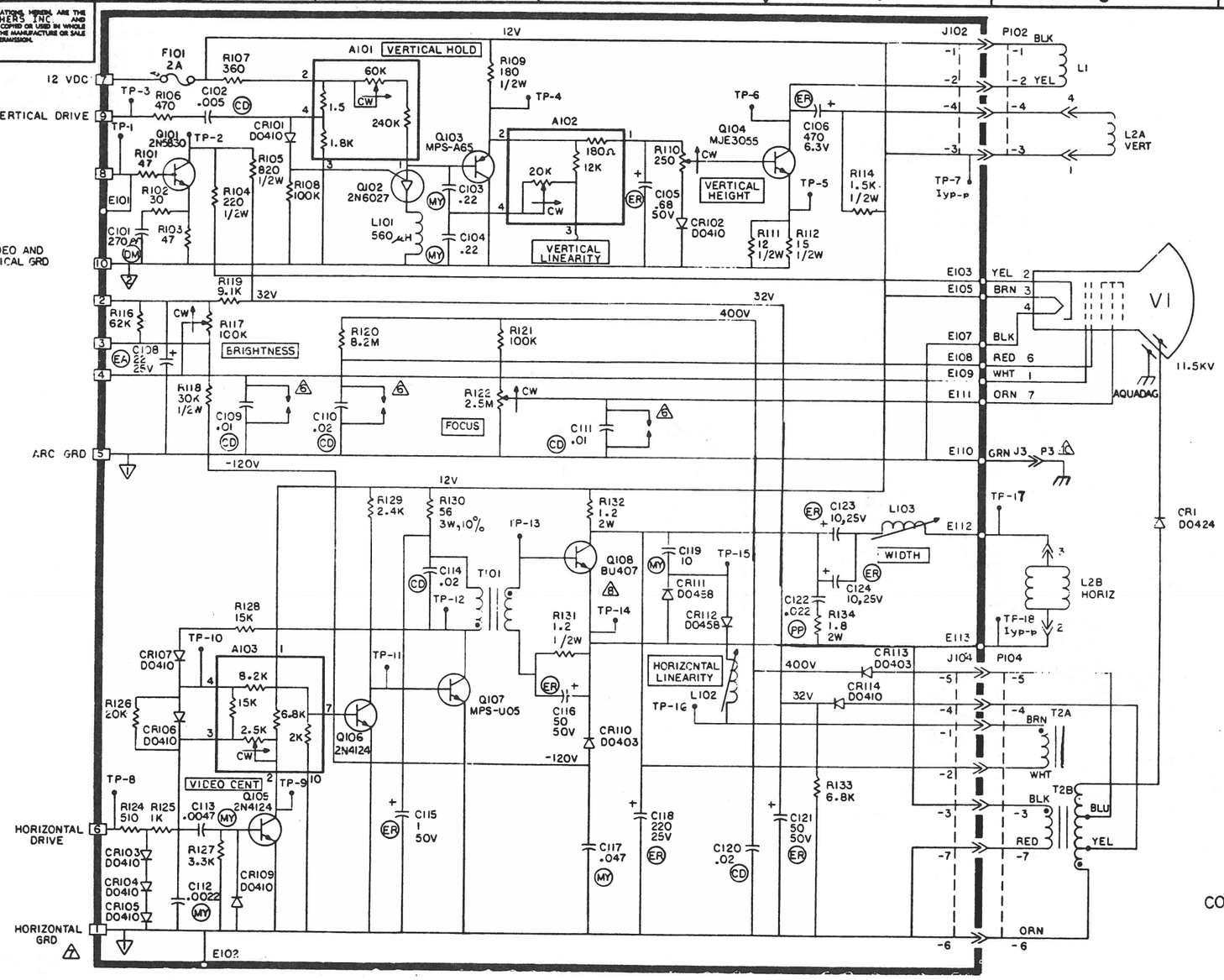

GENERAL NOTES: UNLESS OTHERWISE SPECIFIED

1. ALL RESISTORS 1/4W, 5%, VALUE IN OHMS.
2. ALL CAPACITOR VALUES IN MICROFARADS. FOR CAPACITOR TYPES, SEE NOTE NO. 9.
3. ▭ DENOTES J101 PC CARD EDGE CONNECTOR.
4. ⟫— DENOTES CONNECTION TO OFF BOARD COMPONENTS.
5. REFERENCE DESIGNATIONS NOT USED: J103, C107, CR108, R101, R113, R115, R123
   LAST REFERENCE DESIGNATION USED: R134, C124
6. PROTECTIVE ARC GAPS ARE AN INTEGRAL PART OF PRINTED WIRE BOARD.
7. THE PWB CIRCUIT GROUNDS ARE BROUGHT OUT SEPARATELY TO PINS 1, 5 AND 10 OF J101. PWB CIRCUIT GROUNDS FOR PINS 1 AND 5 OF J101 ARE CONNECTED TOGETHER BY A JUMPER WIRE ON THE BOARD AND ARE CONNECTED TO CHASSIS GROUND VIA A WIRE FROM E110.
8. DENOTES HEATSINK
9. (DM) = DIPPED MICA
   (CD) = CERAMIC DISC
   (MY) = MYLAR
   (EA) = ELECTROLYTIC AXIAL
   (ER) = ELECTROLYTIC RADIAL
   (FP) = POLYPROPYLENE
10. GROUNDED TO AQUADAG (BY SPRING

COPIED BY WRITTEN PERMISSION OF BALL BROS.

DRN. Jim Dinger 7/20/78	FIRST USED ON VT100	
CHK'D	TITLE SCHEMATIC TVX120/DEC 12 VOLT	
ENG.		
PROJ. ENG.		
PROD.		
NEXT HIGHER ASSY. E-UA-VT100-0-0	SIZE D	CODE CS
SCALE NONE	NUMBER 3014590-0-1	REV. A
SHEET 2 OF 2	DIST.	

REVISIONS: REV. / CHANGE NO. / CHK.

D CS 3014590-0-1 A

NOTES:

1. INSERT CONN. (ITEM 3) INTO CONN. OF (ITEM 2) FOR TESTING OPTION.
2. PACKAGING: WHEN SHIPPED, MATERIAL SHALL BE ADEQUATELY PROTECTED FROM HANDLING AND SHIPPING DAMAGE USING DIGITAL PACKAGING INSTRUCTION A-SP-3700538-00
3. LOCATE APPROX. AS SHOWN ON DWG.
4. TORQUE (ITEM 6) TO 6.0 IN-LBS ± .5 IN-LBS.
5. TORQUE (ITEM 7) TO 8.0 IN-LBS ± .5 IN-LBS.

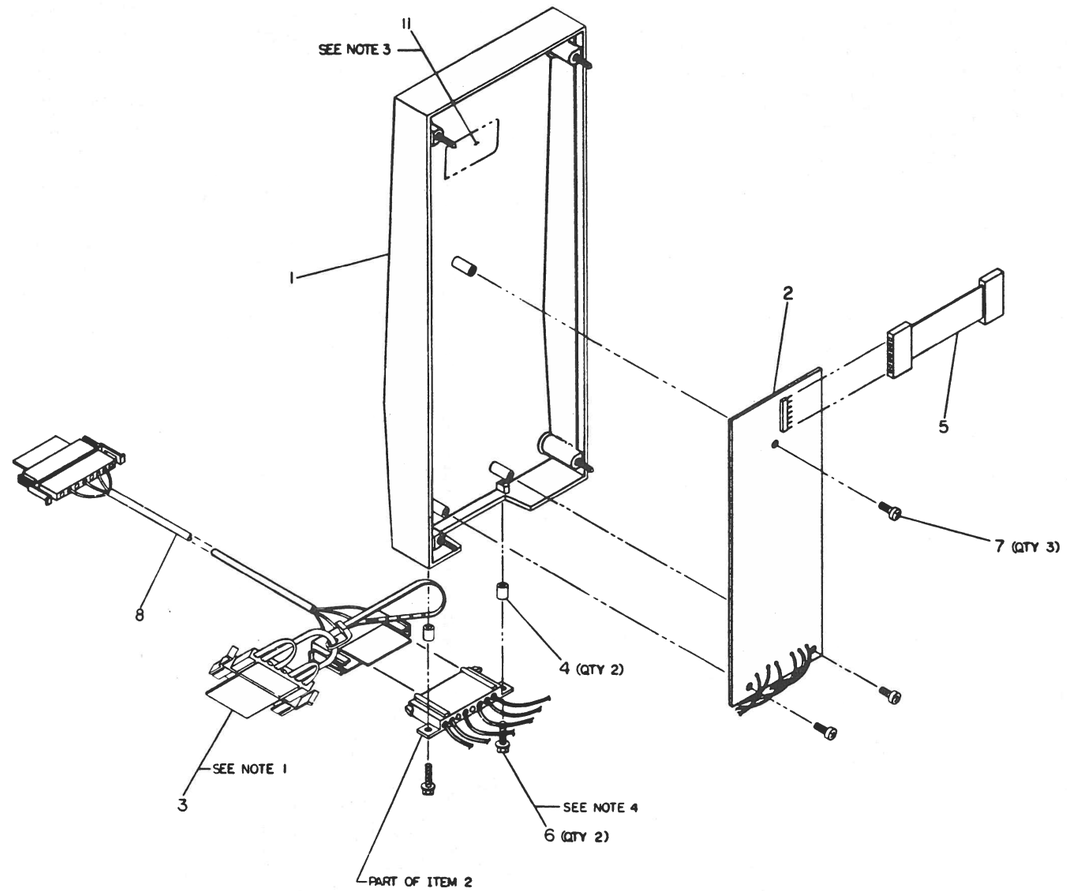

CAUTION: OFF SHEET PARTS LIST EXISTS. REFER TO 4-FL-VTIXX-AA-108P

VT1XX-AA-0

PARTS LIST

8-00-VT1XX-AA

SCALE 1/1

SHEET 1 OF 1

VT100

20-00-20

20MA CURRENT LOOP OPTION

UA VT1XX-AA-0

THIS DRAWING AND SPECIFICATIONS, HEREIN, ARE THE PROPERTY OF DIGITAL EQUIPMENT CORPORATION AND SHALL NOT BE REPRODUCED OR COPIED OR USED IN WHOLE OR IN PART AS THE BASIS FOR THE MANUFACTURE OR SALE OF ITEMS WITHOUT WRITTEN PERMISSION.
COPYRIGHT © 1980 DIGITAL EQUIPMENT CORPORATION

COMPONENT SIDE VIEW

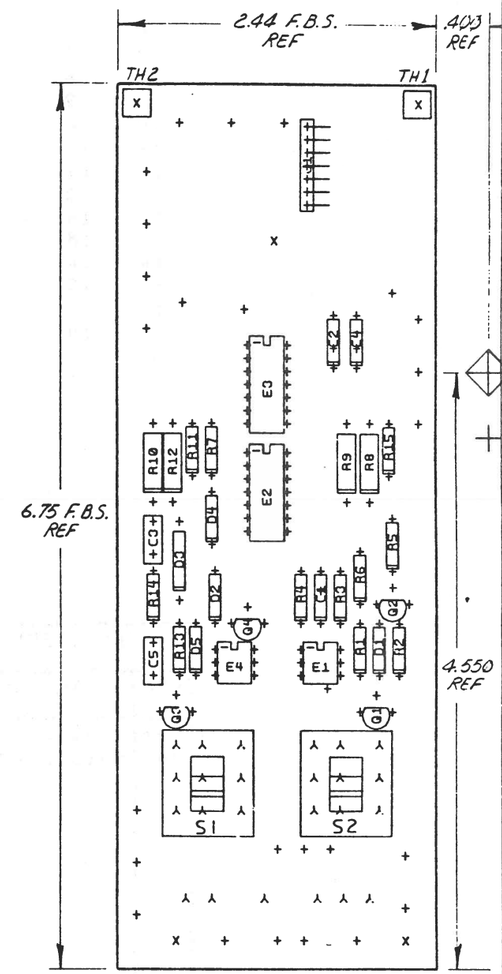

NOTES:

STEP & REPEAT	
↑ Y AXIS	STEP 0 TIMES
→ X AXIS	2.750 / 2.5 / 2.750

CHK	CHANGE NO	REV
	5-413206-PN0001	C
	REVISED & REDRAWN	
	J. DEMARINIS	

ETCH REV. D

SIGNATURES	DATE
DRN. V. PARECHANIAN	11-77
CHK'D. M. MORTENSEN	11-77
MECH. ENG. M. MORTENSEN	4-78
PROJ. ENG. N. FORRESTER	5-78
PROD. R. PUCCI	6-78
SCALE 2/1	
SHT. 1 OF 1	
NEXT HIGHER ASSY. B-DD-5413206-0	

digital

TITLE 20 MA ADAPTER

SIZE	CODE	NUMBER	REV
D	UA	5413206-0-0	C

DUAL 5413206-0-0 C

WO# 150220

AUTOMATED BY PRTLST,1D(11)

P A R T S L I S T

LINE	ITEM	DOCUMENT NUMBER	PART NUMBER	DESCRIPTION	QTY PER VARIATION 00	REFERENCE DESIGNATOR
1	1	D-MD-5013205-0-0	5013205-00	ETCH BOARD FOR 5413206	1	
2	2		1000022-00	270.0 MMF 100V 5%200PPM MICA	2	C3,C5
3	3		1001610-00	.01 MFD 50V +80-20% 25U CER	3	C1,C2,C4
4	4		1105275-00	D 672 TR= 15NS PIV= 60V SI	3	D1,D2,D4
5	5		1105610-00	MCL1301 CL@1MA FROM10-80V	1	D3
6	6		1215048-01	CONN 7POS RT ANGLE	1	J1
7	7		1215089-00	SW,SLIDE 3P 1A DBLE THROW	2	S1,S2
8	8		1301522-00	27.0 .25 W 5.0 % CC	1	R2
9	9		1300250-00	150.0 .25 W 5.0 % CC	2	R11,R15
10	10		1300296-00	330.0 .50 W 5.0 % CC	4	R8,R9,R10,R12
11	11		1300309-00	390.0 .25 W 5.0 % CC	2	R1,R14
12	12		1300391-00	1.50 K .25 W 5.0 % CC	1	R7
13	13		1300444-00	3.90 K .25 W 5.0 % CC	1	R6
14	14		1300539-00	120.0 K .25 W 5.0 % CC	1	R4
15	15		1301327-00	68.0 K .25 W 5.0 % CC	1	R13
16	16		1301401-00	750.0 .25 W 5.0 % CC	1	R3
17	17		1301422-00	7.50 K .25 W 5.0 % CC	1	R5
18	18		1509338-00	DEC6531B NPN 310MW SI 40 90 P	2	Q1,Q2
19	19		1510705-00	XA 05 NPN 500MW SI 60 50 P	1	Q4
20	20		1510706-00	XA 55 PNP 500MW SI 60 50 P	1	Q3
21	21		1916959-00	POTOTRANSISTOR	2	E1,E4
22	22		1912817-00	LS37 NAND GATE-QUAD 2IN,P	1	E2
23	23		1913130-00	DEC 14H9A RECEIVER,LINE,QUAD,	1	E3
24	24		1113003-00	IN 5282 PIV=55 I=500M DO35	1	D5

REVISION HISTORY			BASIC PART NO: 5413206										
ENG	ECO NUMBER	REV	SECTION A OF A	DRN: T. SHETRAWSKI	DATE: 30-MAR-78	D	I	G	I	T	A	L	
---	INIT	B	SECTION,VARIATION INDEX	CHK'D: T. SHETRAWSKI	DATE: 30-MAR-78	TITLE PARTS LIST							
JB	5413206-PN001	C	[A] 00			20 MA ADAPTER							
			[B]										
			[C]	DES.ENG: M. MORGENSTERN	DATE: 30-MAR-78								
			[D]										
			[E]			DOCUMENT NUMBER							
			[F]	RESP.ENG.: M. MORGENSTERN	DATE: 30-MAR-78								
			[H]			SIZE	CODE	NUMBER				REV	
			[J]										
			[K]	MFG.ENG.: T. CORCIARI	DATE: 30-MAR-78	K	PL	5413206-0-DBP				C	
			[L]										
			[M]	ASSEMBLY NUMBER:	TOP DOCUMENT NUMBER:			FILE NAME:				EDIT #	
			[N]	D-UA-5413206-0-0	VT100			13206C.PLS				6	

"THIS DRAWING AND SPECIFICATIONS HEREIN, ARE THE PROPERTY OF DIGITAL EQUIPMENT CORPORATION AND SHALL NOT BE REPRODUCED OR COPIED OR USED IN WHOLE OR IN PART AS THE BASIS FOR THE MANUFACTURE OR SALE OF ITEMS WITHOUT WRITTEN PERMISSION. COPYRIGHT (C) 1980, DIGITAL EQUIPMENT CORPORATION "

"THIS DRAWING AND SPECIFICATIONS, HEREIN, ARE THE PROPERTY OF DIGITAL EQUIPMENT CORPORATION AND SHALL NOT BE REPRODUCED OR COPIED OR USED IN WHOLE OR IN PART AS THE BASIS FOR THE MANUFACTURE OR SALE OF ITEMS WITHOUT WRITTEN PERMISSION.
COPYRIGHT © 1977 , DIGITAL EQUIPMENT CORPORATION"

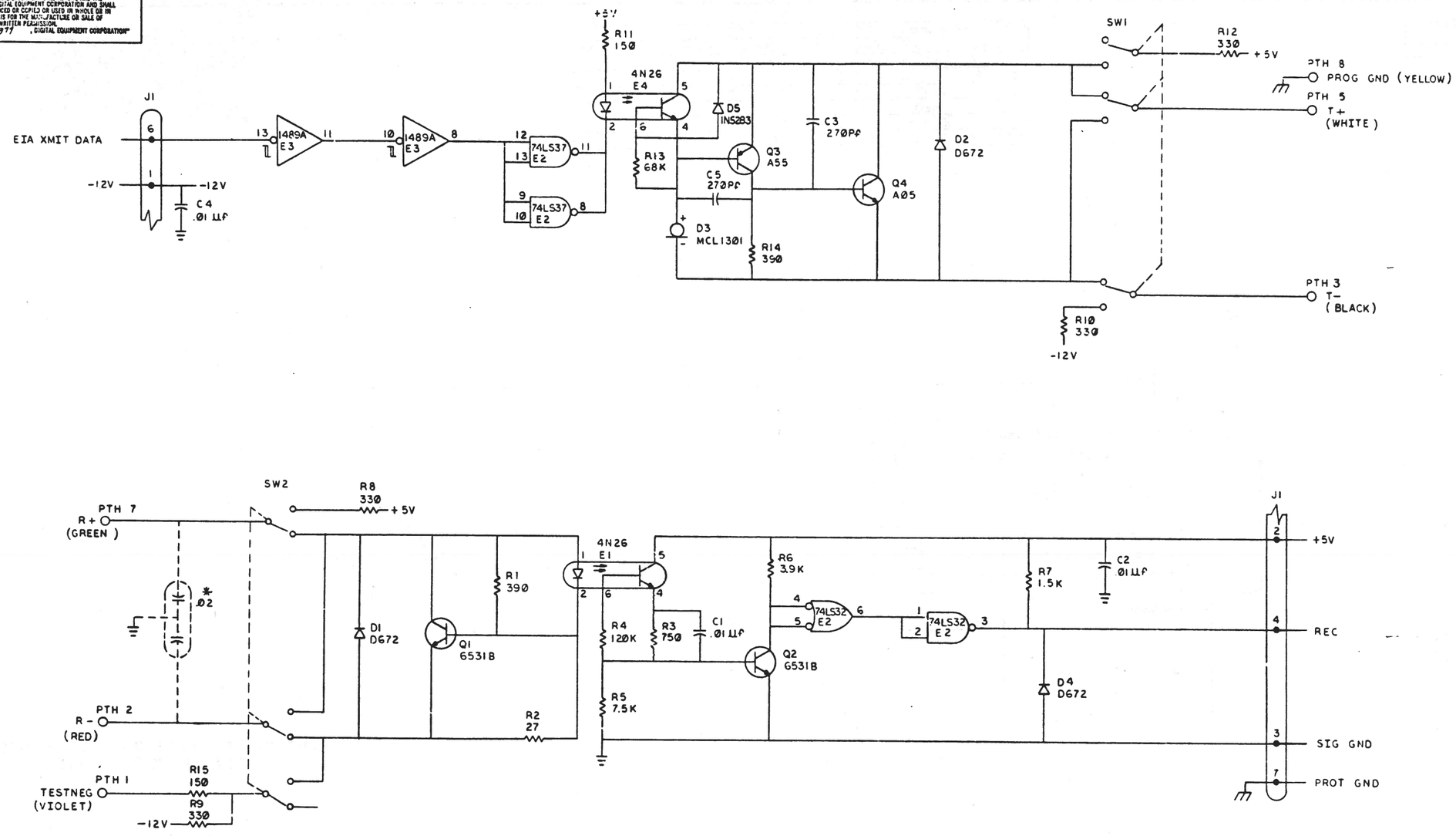

NOTE:
1. * OPTIONAL

REVISIONS		
CHK	CHANGE NO.	REV.
	5413206 - PN0001	C

J. DEMARINIS 9-28-81 11-16-82

DRN		30 Nov 77
CHK		6/8/78
ENG.		4-13-78
PROJ. ENG.		6/12/78
PROD.		6/13/78
NEXT HIGHER ASSY.		
D-UA-5413206-0-0		
SCALE		
SHEET / OF /		

FIRST USED ON: VT100

digital

TITLE: 20 MA ADAPTOR

SIZE	CODE	NUMBER	REV.
D	CS	5413206-0-1	C

DIST.

"THIS DRAWING AND SPECIFICATIONS, HEREIN, ARE THE PROPERTY OF DIGITAL EQUIPMENT CORPORATION AND SHALL NOT BE REPRODUCED OR COPIED OR USED IN WHOLE OR IN PART AS THE BASIS FOR THE MANUFACTURE OR SALE OF ITEMS WITHOUT WRITTEN PERMISSION.
COPYRIGHT © 1977 , DIGITAL EQUIPMENT CORPORATION"

WIRE TABLE

ITEM NO.	DESCRIPTION AWG	COLOR	FROM CONN	FROM WITH	TO CONN	TO WITH	REMARKS
10	22	YELLOW	PIN 8		ITEM 1 GND		
		GREEN	7		R+		
		WHITE	5		T+		
		RED	3		R-		
		BLACK	2		T-		
10	22	VIOLET	PIN 1		ITEM 1 -		

NOTES:

1. FOR INDIVIDUAL FIELD SERVICE/ CUSTOMER SPARES SHIPMENTS USE PACKAGING INSTRUCTIONS A-SP-3700550-0-0, FOR BULK INTERPLANT SHIPMENTS USE PACKAGING INSTRUCTIONS A-SP-3700429-0-0, VARIATION-03

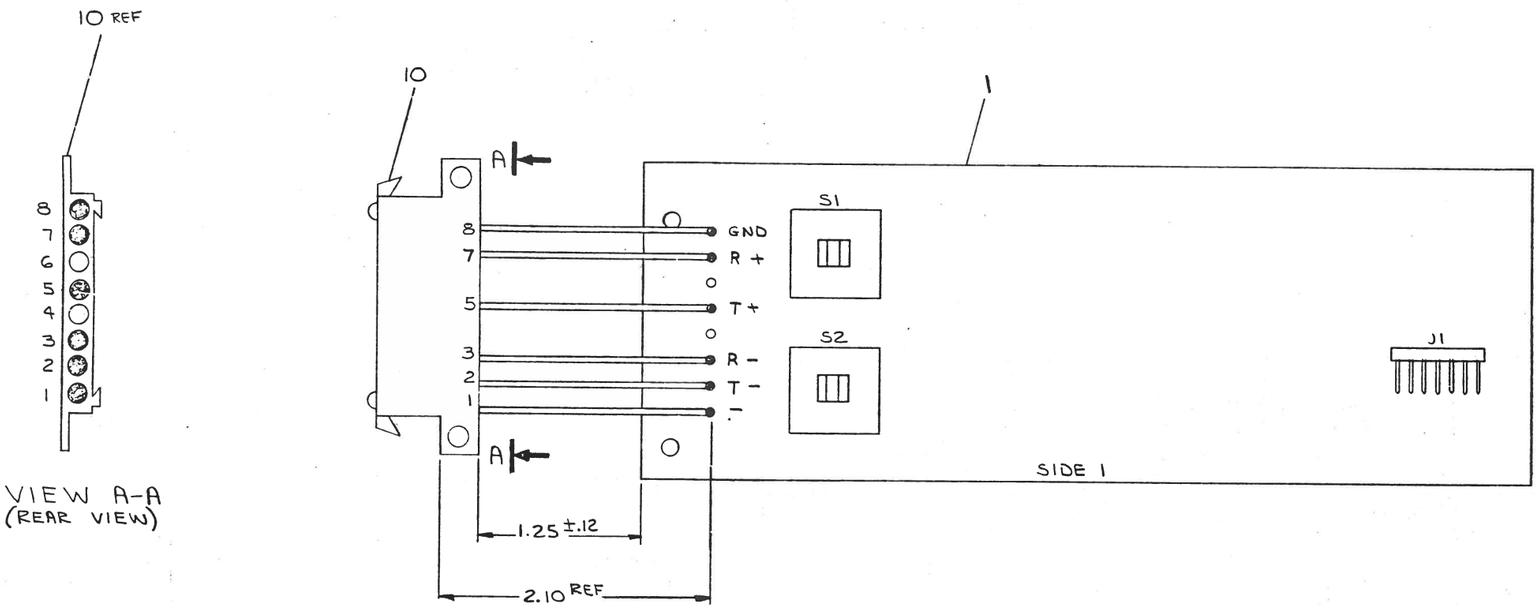

CAUTION: OFF SHEET PARTS LIST EXISTS, SEE K-PL-7015273-0-DBP.

REVISIONS			
CHK	CHANGE NO.		REV.
	7015273-ML001	25 AUG 80	A
	J DEMARINIS		
	7015273-ML002	2 MAR 81	B
	J DEMARINIS		

QUANTITY & VARIATION

THIRD ANGLE PROJECTION

REMOVE BURRS AND BREAK SHARP CORNERS

DO NOT SCALE DWG

MATERIAL SEE PARTS LIST

FINISH

DESCRIPTION	DWG./PART NO.	ITEM NO.
UNLESS OTHERWISE SPECIFIED DIMENSIONS ARE IN INCHES		

ANGLES ±0° 30'	CLASS OF ACCURACY (CHECK ONE)	NOMINAL DIMENSION RANGE INCHES					
SURFACE QUALITY IN MICROINCHES		OVER 0 TO 0.2	OVER 0.2 TO 1.2	OVER 1.2 TO 4.0	OVER 4.0 TO 12.0	OVER 12.0 TO 40.0	OVER 40.0 TO 80.0
	MEDIUM	±.006	±.008	±.012	±.016	±.024	±.04
	PREFERRED	±.012	±.016	±.026	±.04	±.063	±0.1

DRN. 8 NOV 77
CHK'D 8 Nov 77
ENG. 11-14-78
PROJ. ENG. 11-14-78
PROD. 11-14-78

NEXT HIGHER ASSY. E-UA-VTIXX-AA-Ø

SCALE 2/1

SHEET 1 OF 1

FIRST USED ON VTIØØ

digital

TITLE 2Ø MA ADAPTER ASSY

SIZE	CODE	NUMBER	REV.
D	IA	7015273-0-0	B

DIST.

DEC FORM NO. DSD 108-0

"THIS DRAWING AND SPECIFICATIONS, HEREIN, ARE THE PROPERTY OF DIGITAL EQUIPMENT CORPORATION AND SHALL NOT BE REPRODUCED OR COPIED OR USED IN WHOLE OR IN PART AS THE BASIS FOR THE MANUFACTURE OR SALE OF ITEMS WITHOUT WRITTEN PERMISSION. COPYRIGHT © 1978, DIGITAL EQUIPMENT CORPORATION"

WIRE TABLE

ITEM NUMBER	DESCRIPTION AWG	DESCRIPTION COLOR	FROM CONNECTION	FROM WITH	TO CONNECTION	TO WITH
1	24	BLK	J1-1	3	J2-1	3
	↕	↕	J1-2	↕	J2-2	↕
			J1-3		J2-3	
			J1-4		J2-4	
			J1-6		J2-6	
	24	BLK	J1-7	3	J2-7	3

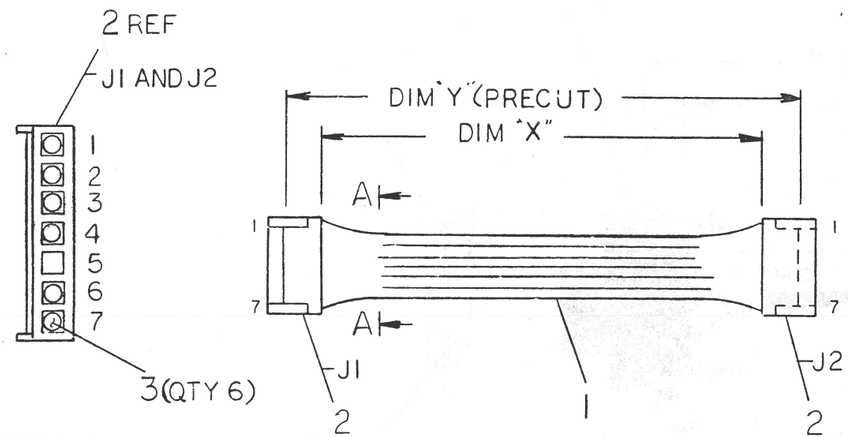

VIEW A-A
REAR VIEW
2 PLACES

LEGEND

NUMBER	DIM "X" VARIATION	DIM "Y" (PRECUT) REF
7015506-ØB	2.0 IN ±.25 IN.	2.75 IN.

12	CONTACT, PIN	1214979-00	3
2	HOUSING, 7 CONN	1215047-01	2
A/R	WIRE, 24AWG, STRD (BLK)	9107450-00	1
	DESCRIPTION	DWG./PART NO.	ITEM NO.

UNLESS OTHERWISE SPECIFIED DIMENSIONS ARE IN INCHES

ANGLES ±0° 30'	CLASS OF ACCURACY (CHECK ONE)	OVER 0 TO 0.2	OVER 0.2 TO 1.2	OVER 1.2 TO 4.0	OVER 4.0 TO 12.0	OVER 12.0 TO 40.0	OVER 40.0 TO 80.0
SURFACE QUALITY IN MICROINCHES	MEDIUM ☐	±.004	±.008	±.012	±.016	±.024	±.04
	PREFERRED ☐	±.012	±.016	±.025	±.04	±.063	±0.1

NOMINAL DIMENSION RANGE INCHES

QUANTITY & VARIATION

THIRD ANGLE PROJECTION

REMOVE BURRS AND BREAK SHARP CORNERS

DO NOT SCALE DWG

MATERIAL SEE PARTS LIST

FINISH

DRN. Godfrey 5-Jan-78
CHK'D 5-Jan-78
ENG. 1-23-78
PROJ. ENG. 1-23-78
PROD. 1-24-78

NEXT HIGHER ASSY. E-UA-VTXX-AA

SCALE NONE

SHEET 1 OF 1

FIRST USED ON VTIØØ

digital

TITLE CABLE, INTERNAL 2ØMA ADAPTOR

SIZE	CODE	NUMBER	REV.
C	IA	7015506-0-0	A

DIST.

REVISIONS		
CHK	CHANGE NO.	REV.
7015506-ML001		A
G. Spaeng 28-Feb-79		
C. JAMES		
R. Pucci 14-Jan-79		

MAKEFACE P-1488

DEC FORM NO.

This drawing and specifications, herein, are the property of Digital Equipment Corporation and shall not be reproduced or copied or used in whole or in part as the basis for the manufacture or sale of items without written permission.

LEGEND

NUMBER	DIM "X" VARIATION	DIM "Y" (PRECUT) REF
BCØ5F-15	15 FT. ± 3 IN.	15 FT. .75 IN. ±3 IN.
BCØ5F-9	9 FT. ± 2 IN	9 FT. .75 IN. ±2 IN.
BCØ5F-Ø4	4 FT. ±1 IN	4 FT. .75 IN. ±1 IN
BCØ5F-25	25 FT. ±3 IN	25 FT. .75 IN. ±3 IN
BCØ5F-3Ø	30 FT. ±2%	30 FT. .75 IN. ±2%
BCØ5F-45	45 FT. ±2%	45 FT. .75 IN. ±2%
BCØ5F-5Ø	50 FT. ±2%	50 FT. .75 IN. ±2%
BCØ5F-9Ø	90 FT. ±2%	90 FT. .75 IN. ±2%
BCØ5F-BØ	200 FT. ±2%	200 FT. .75 IN. ±2%
BCØ5F-CØ	300 FT. ±2%	300 FT. .75 IN. ±2%
BCØ5F-EØ	500 FT. ±2%	500 FT. .75 IN. ±2%

WIRE TABLE

ITEM NO	DESCRIPTION AWG	COLOR	FROM CONNECTION	TO CONNECTION
3	22	BLK	P1-2	P2-3
3	22	RED	P1-3	P2-2
3	22	WHT	P1-5	P2-7
3	22	GRN	P1-7	P2-5

LEGEND CONT.

NUMBER	DIM "X"	DIM "Y" REF
BCØ5F-ES	550 FT. ± 2%	550 FT. .75 IN ±2%
BCØ5F-LØ	1000 FT. ± 2%	1000 FT. .75 IN ± 2%

NOTES:

1. ASSEMBLE CABLE I.D. LABEL TO AREA AS SHOWN BELOW.

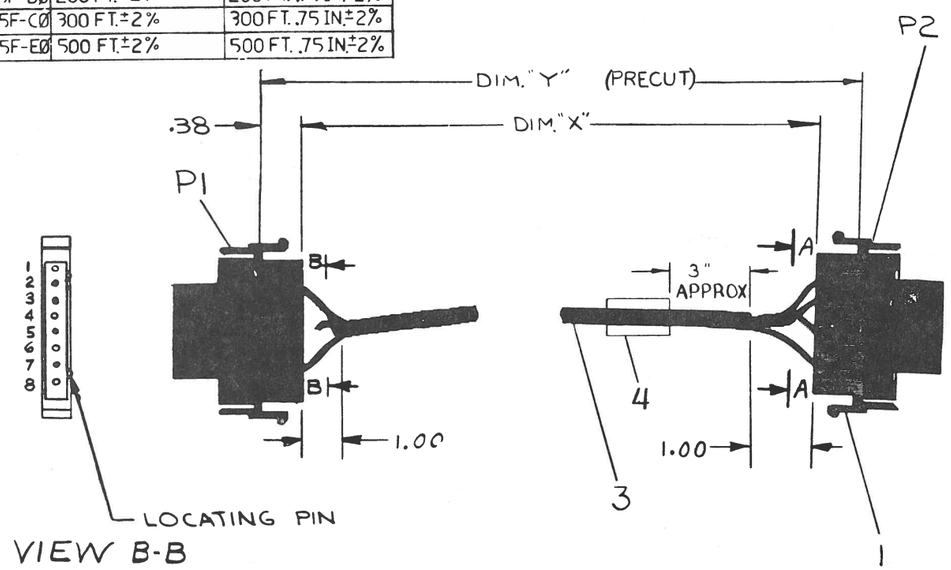

CAUTION: FOR OFF SHEET PARTS LIST SEE K-PL-BCØ5F-Ø-Ø.

REVISIONS	CHANGE NO.	REV.	CHK
	BCØ5F-00001	A	11-8-71
	LA36-00119	B	7-17-75
	BCØ5F-00002	C	7/18/75
	BCØ5F-ML003	D	19 MAY 81
	BCØ5F-MK004	E	17 Dec 81

R.FITCH 11-9-71; J.BITTO; R.FITCH; J. DESUK; R HARRINGTON

FIRST USED ON OPTION MODEL: DF11

UNLESS OTHERWISE SPECIFIED DIMENSION IN INCHES TOLERANCES DECIMALS ± .005 FRACTIONS ± 1/64 ANGLES ± 0°30' FINAL SURFACE QUALITY REMOVE BURRS AND BREAK SHARP CORNERS

MATERIAL

FINISH

QTY.	DESCRIPTION	PART NO.	ITEM NO.
	PARTS LIST		

DRN. 10/6/70; CHK'D. 10/8/71; ENG. 10-19-71; PROJ. ENG. 10-19-71; PROD. 11-26-70; NEXT HIGHER ASS'Y

SCALE; SHEET 1 OF 1

digital EQUIPMENT CORPORATION MAYNARD, MASSACHUSETTS

TITLE: CABLE INTERFACE BCØ5F

SIZE	CODE	NUMBER	REV.
C	UA	BCØ5F Ø-Ø	E

DIST.

DEC FORM NO. DRC

mK

THIS DRAWING AND SPECIFICATIONS, HEREIN, ARE THE PROPERTY OF DIGITAL EQUIPMENT CORPORATION AND SHALL NOT BE REPRODUCED OR COPIED OR USED IN WHOLE OR IN PART AS THE BASIS FOR THE MANUFACTURE OR SALE OF ITEMS WITHOUT WRITTEN PERMISSION.
COPYRIGHT © 1 - DIGITAL EQUIPMENT CORPORATION

COMPONENT SIDE VIEW

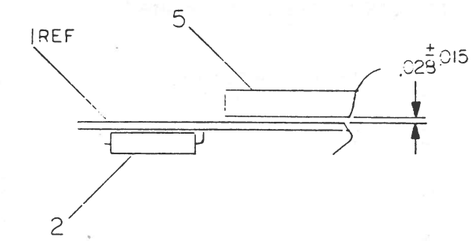

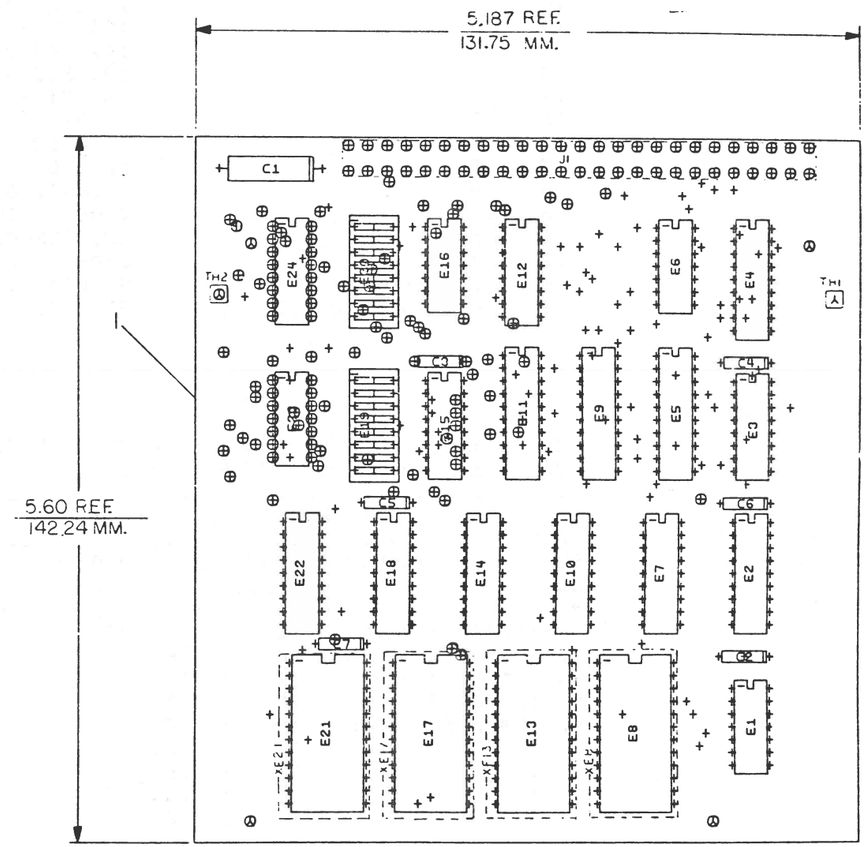

NOTES: J1 CONN MOUNTED ON SIDE 2

STEP E	↑ Y AXIS ___ STEP ___ TIMES 2ML 2
REPEAT	→ X AXIS 5.250 STEP ___ TIMES

CHK	CHANGE NO	REV
	5413097ML005	F
	REDRAWN	
	R. PUCCI	

ETCH REV. C-P 3

SIGNATURES	DATE
DRN.	
CHK'D.	
MECH. ENG.	
PROJ. ENG.	
PROD.	
SCALE 2/1	
SHT. 1 OF 1	
NEXT HIGHER ASSY. B-DD-5413097-0	

digital

TITLE VT100 ADVANACED VIDEO

SIZE	CODE	NUMBER	REV
D	UA	5413097-0-0	F

1 WO# 104150

AUTOMATED BY PRTLST.1D(11)

P A R T S L I S T

LINE	ITEM	DOCUMENT NUMBER	PART NUMBER	DESCRIPTION	QTY PER VARIATION 00	01	02	03	REFERENCE DESIGNATOR
1	1	D-MD-5013096-0-0	5013096-00	DRILL & ETCH DRAWING	1	1	1	1	
2	2		1005306-00	6.8MFD 35V 10% S.TANT	1	1	1	1	C1
3	3		1012784-00	.047 MFD 50V +80-20% CER	6	6	6	6	C2-C7
4	4		1215006-06	SOCKET 24PIN IC LOW PROFILE	4	4	4	4	XE8,XE13,XE17,XE21
5	5		1214060-01	HEADER.150 50POS	1	1	1	1	J1
6	6		1300005-03	R NETWORK 13-10K 5.0 % 14PIN	1	1	1	1	E1
7	7		1300005-07	R NETWORK 15-4.7K 5.0 % 16PIN	1	1	1	1	E15
8	8		1912801-00	LS02 NOR-GATE-QUAD 2IN	1	1	1	1	E6
9	9		1912803-00	74LS04 INVERTER GATE,HEX	1	1	1	1	E23
10	10		1912809-00	LS15 NAND GATE-TRIPLE 3IN	1	1	1	1	E16
11	11		1912842-00	LS138 DECODER-THREE INPUT,	1	1	1	1	E12
12	12		1912843-00	LS139 DECODER, 2 OF 4(DUAL	2	2	2	2	E3,E24
13	13		1912863-00	LS273 FF-D OCTAL W/CLEAR	1	1	1	1	E5
14	14		1914213-00	81LS97 BUFFER GATE-OCTAL 2I	2	2	2	2	E9,E11
15	15		2113106-01	1K MOS RAM 250NS	1	1	1	1	E4
16	16		2114212-00	P 2114-2 RAM,1024X4,STATIC	6	6	6	6	E2,E7,E10,E14,E18,E22
17	18		1211164-04	SW,DIP 1P 1A 8POS	2	2	2	2	E19,E20
18	19		23069E2-00	E2-02,E2-04 RO	-	1	-	-	E21
19	20		23099E2-00	E2-02	-	-	1	-	E21
20	21		23100E2-00	E2-02	-	-	1	-	E17
21	22		23093E2-00	E2-02,E2-04	-	-	-	1	E21
22	23	A-SP-3700554-0-0	3700554-00	PKG MODULE 5413097	REF	REF	REF	REF	
23	24	A-SP-3700438-0-0	3700438-05	PKG. BULK CARTON 9906476-29	REF	REF	REF	REF	

24 NOTE: FOR INDIVIDUAL FIELD SERVICE/CUSTOMER SPARES SHIPMENT USE PACKAGING INSTRUCTION A-SP-3700554-0-0.
25 NOTE: FOR BULK INTERPLANT SHIPMENT USE PACKAGING INSTRUCTIONS A-SP-3700438-00.

REVISION HISTORY			
ENG	ECO NUMBER	REV	
---	INIT	A	
---	5413097-ML002	C	
CJ	5413097-ML003	D	
CJ	5413097-ML004	E	
DP	5413097-ML005	F	
RB	5413097-ML006	H	

BASIC PART NO: 5413097
SECTION A OF A
SECTION.VARIATION INDEX
[A] 00,01,02,03
[B]
[C]
[D]
[E]
[F]
[H]
[J]
[K]
[L]
[M]
[N]

DRN: T. SHETRAWSKI — DATE: 10-MAR-78
CHK'D: T. SHETRAWSKI — DATE: 10-MAR-78
DES.ENG: D. PUCCI — DATE: 10-MAR-78
RESP.ENG.: D. PUCCI — DATE: 10-MAR-78
MFG.ENG.: T. CORCIARI — DATE: 10-MAR-78

D I G I T A L

TITLE PARTS LIST
VT100 ADV VIDEO

DOCUMENT NUMBER

SIZE	CODE	NUMBER	REV
K	PL	5413097-0-DBP	H

ASSEMBLY NUMBER: D-UA-5413097-0-0
TOP DOCUMENT NUMBER: B-DD-5413097-0-0
FILE NAME: Z1081H.PLS
EDIT # 9

"THIS DRAWING AND SPECIFICATIONS HEREIN, ARE THE PROPERTY OF DIGITAL EQUIPMENT CORPORATION AND SHALL NOT BE REPRODUCED OR COPIED OR USED IN WHOLE OR IN PART AS THE BASIS FOR THE MANUFACTURE OR SALE OF ITEMS WITHOUT WRITTEN PERMISSION.
COPYRIGHT (C) 1981. DIGITAL EQUIPMENT CORPORATION "

THE DRAWING AND SPECIFICATIONS, HEREIN, ARE THE PROPERTY OF DIGITAL EQUIPMENT CORPORATION AND SHALL NOT BE REPRODUCED OR COPIED OR USED IN WHOLE OR IN PART AS THE BASIS FOR THE MANUFACTURE OR SALE OF ITEMS WITHOUT WRITTEN PERMISSION. COPYRIGHT © 1978 , DIGITAL EQUIPMENT CORPORATION"

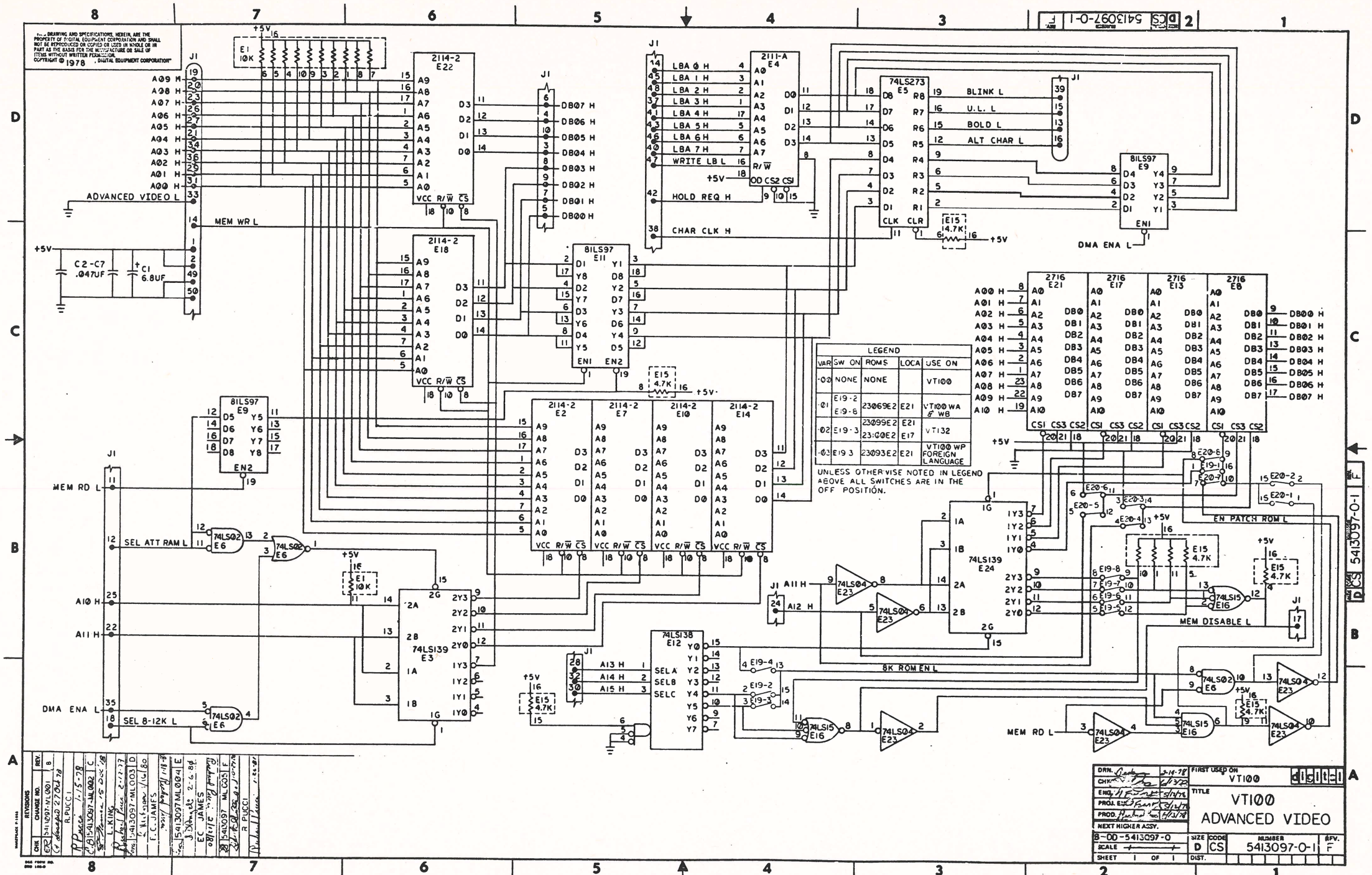

LEGEND				
VAR	SW ON	ROMS	LOCA	USE ON
·00	NONE	NONE		VT100
·01	E19-2 E19-6	23069E2	E21	VT100 WA & WB
·02	E19-3	23099E2 23100E2	E21 E17	VT132
·03	E19-3	23093E2	E21	VT100 WP FOREIGN LANGUAGE

UNLESS OTHERWISE NOTED IN LEGEND ABOVE ALL SWITCHES ARE IN THE OFF POSITION.

REVISIONS				
CHK	CHANGE NO.	REV.		
EC	5413097-ML001	B	R. PUCCI	27 Oct 78
	5413097-ML002	C	L. KING	15 Dec 78
	5413097-ML003	D	R. Nelson	1/16/80
	5413097ML004	E	F. C. JAMES	2/6/84
	5413097 ML005	F	EC JAMES	1/10/86
	5413097 ML006		R. PUCCI	1-26-87

DRN.		2-14-78
CHK.		
ENG.		5/14/78
PROJ. ENG.		5/14/78
PROD.		5/24/78
NEXT HIGHER ASSY.	8-00-5413097-0	
SCALE	—	
SHEET	1 OF 1	

FIRST USED ON: VT100

TITLE: VT100 ADVANCED VIDEO

SIZE	CODE	NUMBER	REV.
D	CS	5413097-0-1	F

DIST.

5413097-0-1 F

DIGITAL EQUIPMENT CORPORATION
PARTS LIST

MADE BY	D. HEALY	CHECKED	D. HEALY	SECTION	A1
DATE	14-JUN-78	DATE	14-JUN-78		
ENG	E. WEDEKING	PROD	K. HOFFMAN	ISSUED SECTION	A2
DATE	10-JUL-78	DATE	10-JUL-78		

NOTES:
1. VARIATIONS BA,BB,CA,CB,DA, & DB ARE SHIPPING CONFIGURATIONS ONLY. THEY ARE PACKAGED AT THE WAREHOUSE AND FA&T SYSTEMS PLANTS FOR SHIPMENT. ALL QUANTITIES ARE FOR REFERENCE ONLY.

ITEM NO.	DRAWING NO.	PART NO.	DESCRIPTION	QUANTITY / VARIATION												REF DESIGNATION
				VT1ØØ-AA	VT1ØØ-AB	VT1ØØ-NA	VT1ØØ-NB	VT1ØØ-WA	VT1ØØ-WB	VT1ØØ-WC	VT1ØØ-WD	VT1ØØ-WE	VT1ØØ-WF	VT1ØØ-WG	VT1ØØ-WH	
1	EK-VT1ØØ-UG-001	EK-VT1ØØ-UG	GUIDE, USERS VT1ØØ	1	1	1	1	1	1	1	1	1	1	1	1	
2		3615741	LABEL, SET-UP, VT1ØØ	1	1	1	1	1	1	-	-	-	-	-	-	
3		VT1ØØ-AA	TERM., VIDEO, W/115V PLUG	1	-	-	-	-	-	-	-	-	-	-	-	
4		VT1ØØ-AB	TERM., VIDEO, W/23ØV PLUG	-	1	-	-	-	-	-	-	-	-	-	-	
5		VT1ØØ-NA	TERM., VIDEO, DECFORM,W/115V PLUG	-	-	1	-	-	-	-	-	-	-	-	-	
6		VT1ØØ-NB	TERM., VIDEO, DECFORM,W/23ØV PLUG	-	-	-	1	-	-	-	-	-	-	-	-	
7		VT1ØØ-WA	TERM., VIDEO, WORD PROCESSING, W/115V PLUG.	-	-	-	-	1	-	-	-	-	-	-	-	
8		VT1ØØ-WB	TERM., VIDEO, WORD PROCESSING, W/230V PLUG.	-	-	-	-	-	1	-	-	-	-	-	-	
9	A-SP-VT1ØØ-W-Ø		INSTALLATION NOTES, WORD PROCESSING TERMINAL.	-	-	-	-	1	1	1	1	1	1	1	1	
10		VT1ØØ-WC	TERM, VIDEO, FR. CANADIAN WP W/ 115V PLUG	-	-	-	-	-	-	1	-	-	-	-	-	
11		VT1ØØ-WD	TERM, VIDEO, FR. CANADIAN WP W/ 230V PLUG	-	-	-	-	-	-	-	1	-	-	-	-	
12		VT1ØØ-WE	TERM, VIDEO, FRENCH WP W/115V PLUG	-	-	-	-	-	-	-	-	1	-	-	-	
13		VT1ØØ-WF	TERM, VIDEO, FRENCH WP W/230V PLUG	-	-	-	-	-	-	-	-	-	1	-	-	
14		VT1ØØ-WG	TERM, VIDEO, DUTCH,WP W/115V PLUG	-	-	-	-	-	-	-	-	-	-	1	-	
15		VT1ØØ-WH	TERM, VIDEO, DTUCH,WP W/230V PLUG	-	-	-	-	-	-	-	-	-	-	-	1	
16		VT1ØØ-WJ	TERM, VIDEO, GERMAN WP W/115V PLUG	-	-	-	-	-	-	-	-	-	-	-	-	
17		VT1ØØ-WK	TERM, VIDEO, GERMAN WP W/230V PLUG	-	-	-	-	-	-	-	-	-	-	-	-	
18		VT1ØØ-WY	TERM, VIDEO, WP W/115V PLUG	-	-	-	-	-	-	-	-	-	-	-	-	

E.C.O. NO.			
ML032	ML037	VT100-ML042	VT100-ML047

"THIS DRAWING AND SPECIFICATIONS, HEREIN, ARE THE PROPERTY OF DIGITAL EQUIPMENT CORPORATION AND SHALL NOT BE REPRODUCED OR COPIED OR USED IN WHOLE OR IN PART AS THE BASIS FOR THE MANUFACTURE OR SALE OF ITEMS WITHOUT WRITTEN PERMISSION. COPYRIGHT ©1978 DIGITAL EQUIPMENT CORPORATION"

DRB 125

TITLE	ASSY NO.	SIZE	CODE	NUMBER	REV.
SHIPPING LIST VT1ØØ	—	B	PL	VT1ØØ-Ø	H
	SHEET 1 OF 6	INSERTION PARTS LIST DATA BASE REV			

ML3

DIGITAL EQUIPMENT CORPORATION
PARTS LIST

MADE BY	D. HEALY	CHECKED	D. HEALY	SECTION	A2
DATE	14-JUN-78	DATE	14-JUN-78		
ENG	E. WEDEKING	PROD	K. HOFFMAN	ISSUED SECTION	A2
DATE	10-JUL-78	DATE	10-JUL-78		

NOTES:

SEE NOTE 1, PAGE 1

ITEM NO.	DRAWING NO.	PART NO.	DESCRIPTION	VT1ØØ-AA	VT1ØØ-AB	VT1ØØ-NA	VT1ØØ-NB	VT1ØØ-WA	VT1ØØ-WB	VT1ØØ-WC	VT1ØØ-WD	VT1ØØ-WE	VT1ØØ-WF	VT1ØØ-WG	VT1ØØ-WH	REF DESIGNATION
19		VT1ØØ-WZ	TERM, VIDEO, WP W/230V PLUG	-	-	-	-	-	-	-	-	-	-	-	-	
20		3615741-01	LABEL, SET-UP, VT1ØØ FOR SYSTEMS	-	-	-	-	-	-	1	1	1	1	1	1	
21		AA-H989A-TA	VT1ØØ FOREIGN LANGUAGE SUPPLEMENT	-	-	-	-	-	-	1	1	1	1	1	1	
22		VT1ØØ-LA	TERM, VIDEO, W/P4Ø TUBE	1	-	-	-	-	-	-	-	-	-	-	-	
23		VT1ØØ-LB	TERM, VIDEO, W/P4Ø TUBE	-	1	-	-	-	-	-	-	-	-	-	-	
24		VT1ØØ-PA	VT1ØØ-AA EXCEPT DARK GRAY 12ØV PRIVATE BRAND	-	-	-	-	-	-	-	-	-	-	-	-	
25		VT1ØØ-PB	VT1ØØ-AB EXCEPT DARK GRAY 24ØV PRIVATE BRAND	-	-	-	-	-	-	-	-	-	-	-	-	
26		VT1ØØ-PC	VT1ØØ-PA WITHOUT ELECTRONICS 12ØV PRIVATE BRAND	-	-	-	-	-	-	-	-	-	-	-	-	
27		VT1ØØ-PD	VT1ØØ-PB WITHOUT ELECTRONICS 24ØV PRIVATE BRAND	-	-	-	-	-	-	-	-	-	-	-	-	
28		VT1ØØ-PE	VT1ØØ-PA WITHOUT ELECTRONICS & NO KEYBOARD 12ØV PRIVATE BRAND	-	-	-	-	-	-	-	-	-	-	-	-	
29		VT1ØØ-PF	VT1ØØ-PB WITHOUT ELECTRONICS & NO KEYBOARD 24ØV PRIVATE BRAND	-	-	-	-	-	-	-	-	-	-	-	-	
30		EK-VT100-RC	VT100 PROGRAM REF CARD	1	1	1	1	1	1	1	1	1	1	1	1	
31		3618307-05	BOOKLET, FCC STATEMENT, WITH POUCH	1	1	1	1	1	1	1	1	1	1	1	1	

E.C.O. NO.

"THIS DRAWING AND SPECIFICATIONS, HEREIN, ARE THE PROPERTY OF DIGITAL EQUIPMENT CORPORATION AND SHALL NOT BE REPRODUCED OR COPIED OR USED IN WHOLE OR IN PART AS THE BASIS FOR THE MANUFACTURE OR SALE OF ITEMS WITHOUT WRITTEN PERMISSION. COPYRIGHT ©1978 DIGITAL EQUIPMENT CORPORATION"

TITLE	ASSY NO.	SIZE	CODE	NUMBER	REV.
SHIPPING LIST VT1ØØ	—	B	PL	VT1ØØ-Ø	H
	SHEET 2 OF 6	INSERTION PARTS LIST DATA BASE REV			

DRB 125

ML3

DIGITAL EQUIPMENT CORPORATION
PARTS LIST

MADE BY	D. HEALY	CHECKED	D. HEALY	SECTION	B1
DATE	14-JUN-78	DATE	14-JUN-78		
ENG	E. WEDEKING	PROD	K. HOFFMAN	ISSUED SECTION	B2
DATE	10-JUL-78	DATE	10-JUL-78		

NOTES:

SEE NOTE 1, PAGE 1

ITEM NO.	DRAWING NO.	PART NO.	DESCRIPTION	VT1ØØ-WJ	VT1ØØ-WK	VT1ØØ-WY	VT1ØØ-WZ	VT1ØØ-LA	VT1ØØ-LB	VT1ØØ-PA	VT1ØØ-PB	VT1ØØ-PC	VT1ØØ-PD	VT1ØØ-PE	VT1ØØ-PF	REF DESIGNATION
1	EK-VT1ØØ-UG-001	EK-VT1ØØ-UG	GUIDE, USERS VT1ØØ	1	1	1	1	1	1	-	-	-	-	-	-	
2		3615741	LABEL, SETUP, VT1ØØ	-	-	-	-	1	1	-	-	-	-	-	-	
3		VT1ØØ-AA	TERM., VIDEO, W/115V PLUG	-	-	-	-	-	-	-	-	-	-	-	-	
4		VT1ØØ-AB	TERM., VIDEO, W/23ØV PLUG	-	-	-	-	-	-	-	-	-	-	-	-	
5		VT1ØØ-NA	TERM., VIDEO,DECFORM,W/115V PLUG	-	-	-	-	-	-	-	-	-	-	-	-	
6		VT1ØØ-NB	TERM., VIDEO,DECFORM,W/23ØV PLUG	-	-	-	-	-	-	-	-	-	-	-	-	
7		VT1ØØ-WA	TERM., VIDEO, WORD PROCESSING W/115V PLUG.	-	-	1	-	-	-	-	-	-	-	-	-	
8		VT1ØØ-WB	TERM., VIDEO, WORD PROCESSING, W/ 23ØV PLUG.	-	-	-	1	-	-	-	-	-	-	-	-	
9	A-SP-VT1ØØ-W-Ø		INSTALLATION NOTES, WORD PROCESSING TERMINAL.	1	1	1	1	-	-	-	-	-	-	-	-	
10		VT1ØØ-WC	TERM, VIDEO, FR. CANADIAN WP W/ 115V PLUG	-	-	-	-	-	-	-	-	-	-	-	-	
11		VT1ØØ-WD	TERM, VIDEO, FR. CANADIAN WP W/ 23ØV PLUG	-	-	-	-	-	-	-	-	-	-	-	-	
12		VT1ØØ-WE	TERM, VIDEO,FRENCH WP W/115V PLUG	-	-	-	-	-	-	-	-	-	-	-	-	
13		VT1ØØ-WF	TERM, VIDEO,FRENCH WP W/230V PLUG	-	-	-	-	-	-	-	-	-	-	-	-	
14		VT1ØØ-WG	TERM, VIDEO,DUTCH WP W/115V PLUG	-	-	-	-	-	-	-	-	-	-	-	-	
15		VT1ØØ-WH	TERM, VIDEO,DUTCH WP W/230V PLUG	-	-	-	-	-	-	-	-	-	-	-	-	
16		VT1ØØ-WJ	TERM, VIDEO,GERMAN WP W/115V PLUG	1	-	-	-	-	-	-	-	-	-	-	-	
17		VT1ØØ-WK	TERM, VIDEO,GERMAN WP W/230V PLUG	-	1	-	-	-	-	-	-	-	-	-	-	
18		VT1ØØ-WY	TERM, VIDEO, WP W/115V PLUG	-	-	1	-	-	-	-	-	-	-	-	-	

E.C.O. NO.

"THIS DRAWING AND SPECIFICATIONS, HEREIN, ARE THE PROPERTY OF DIGITAL EQUIPMENT CORPORATION AND SHALL NOT BE REPRODUCED OR COPIED OR USED IN WHOLE OR IN PART AS THE BASIS FOR THE MANUFACTURE OR SALE OF ITEMS WITHOUT WRITTEN PERMISSION. COPYRIGHT ©1978 DIGITAL EQUIPMENT CORPORATION"

DRB 125

TITLE	ASSY NO.	SIZE	CODE	NUMBER	REV.
SHIPPING LIST VT1ØØ	—	B	PL	VT1ØØ-Ø	H
	SHEET 3 OF 6	INSERTION PARTS LIST DATA BASE REV			

ML3

DIGITAL EQUIPMENT CORPORATION
PARTS LIST

MADE BY	D. HEALY	CHECKED	D. HEALY	SECTION	B2
DATE	14-JUN-78	DATE	14-JUN-78		
ENG	E. WEDEKING	PROD	K. HOFFMAN	ISSUED SECTION	B2
DATE	10-JUL-78	DATE	10-JUL-78		

NOTES:

SEE NOTE 1, PAGE 1

ITEM NO.	DRAWING NO.	PART NO.	DESCRIPTION	VT1ØØ-WJ	VT1ØØ-WK	VT1ØØ-WY	VT1ØØ-WZ	VT1ØØ-LA	VT1ØØ-LB	VT1ØØ-PA	VT1ØØ-PB	VT1ØØ-PC	VT1ØØ-PD	VT1ØØ-PE	VT1ØØ-PF	REF DESIGNATION
19		VT1ØØ-WZ	TERM, VIDEO, WP W/230V PLUG	-	-	-	1	-	-	-	-	-	-	-	-	
20		3615741-01	LABEL, SET-UP, VT1ØØ FOR SYSTEMS	1	1	1	1	-	-	-	-	-	-	-	-	
21		AA-H989A-TA	VT1ØØ FOREIGN LANGUAGE SUPPLEMENT	1	1	1	1	-	-	-	-	-	-	-	-	
22		VT1ØØ-LA	TERM, VIDEO, W/P4Ø TUBE	-	-	-	-	1	-	-	-	-	-	-	-	
23		VT1ØØ-LB	TERM, VIDEO, W/P4Ø TUBE	-	-	-	-	-	1	-	-	-	-	-	-	
24		VT1ØØ-PA	VT1ØØ-AA EXCEPT DRAK GRAY 12ØV PRIVATE BRAND	-	-	-	-	-	-	1	-	-	-	-	-	
25		VT1ØØ-PB	VT1ØØ-AB EXCEPT DARK GRAY 24ØV PRIVATE BRAND	-	-	-	-	-	-	-	1	-	-	-	-	
26		VT1ØØ-PC	VT1ØØ-PA WITHOUT ELECTRONICS 12ØV PRIVATE BRAND	-	-	-	-	-	-	-	-	1	-	-	-	
27		VT1ØØ-PD	VT1ØØ-PB WITHOUT ELECTRONICS 24ØV PRIVATE BRAND	-	-	-	-	-	-	-	-	-	1	-	-	
28		VT1ØØ-PE	VT1ØØ-PA WITHOUT ELECTRONICS & NO KEYBOARD 12ØV PRIVATE BRAND	-	-	-	-	-	-	-	-	-	-	1	-	
29		VT1ØØ-PF	VT1ØØ-PB WITHOUT ELECTRONICS & NO KEYBOARD 24ØV PRIVATE BRAND	-	-	-	-	-	-	-	-	-	-	-	1	
30		EK-VT100-RC	VT100 PROGRAM REF CARD	1	1	1	1	1	1	1	1	1	1	1	1	
31		3618307-05	BOOKLET, FCC STATEMENT, WITH POUCH	1	1	1	1	1	1	1	1	-	1	1	1	

E.C.O. NO.

"THIS DRAWING AND SPECIFICATIONS, HEREIN, ARE THE PROPERTY OF DIGITAL EQUIPMENT CORPORATION AND SHALL NOT BE REPRODUCED OR COPIED OR USED IN WHOLE OR IN PART AS THE BASIS FOR THE MANUFACTURE OR SALE OF ITEMS WITHOUT WRITTEN PERMISSION. COPYRIGHT ©1978 DIGITAL EQUIPMENT CORPORATION"

DRB 125

TITLE	ASSY NO.	SIZE	CODE	NUMBER	REV.
SHIPPING LIST VT1ØØ	—//—	B	PL	VT1ØØ-Ø	H
	SHEET 4 OF 6	INSERTION PARTS LIST DATA BASE REV			

MLZ

digital PARTS LIST

DRN. D. HEALY DATE 14-JUN-78	DES. ENG. E. WEDEKING DATE 10-JUL-78	MFG. ENG. K. HOFFMAN DATE 10-JUL-78
CHK'D. D. HEALY DATE 14-JUN-78	RESP. ENG. E. WEDEKING DATE 10-JUL-78	NEXT HIGHER DOC. B-DD-VT1ØØ-Ø

NOTES:

SEE NOTE 1, PAGE 1

ITEM NO.	DRAWING NO.	PART NO.	DESCRIPTION	QUANTITY / VARIATION VT1ØØ-BA	VT1ØØ-BB	VT1ØØ-CA	VT1ØØ-CB	VT1ØØ-DA	VT1ØØ-DB							REFERENCE DESIGNATORS
1	EK-VT1ØØ-UG-001	EK-VT1ØØ-UG	GUIDE, USERS VT1ØØ	—	—	—	—	—	—							
2		3615741	LABEL, SET-UP, VT1ØØ	—	—	—	—	—	—							
3		VT1ØØ-AA	TERM., VIDEO, W/115V PLUG	4	-	8	-	16	-							
4		VT1ØØ-AB	TERM., VIDEO, W/23ØV PLUG	-	4	-	8	-	16							
5		VT1ØØ-NA	TERM., VIDEO, DECFORM,W/115V PLUG	-	-	-	-	-	-							
6		VT1ØØ-NB	TERM., VIDEO DECFORM,W/23ØV PLUG	-	-	-	-	-	-							
7		VT1ØØ-WA	TERM., VIDEO, WORD PROCESSING, W/115V PLUG	-	-	-	-	-	-							
8		VT1ØØ-WB	TERM., VIDEO, WORD PROCESSING W/23ØV PLUG	-	-	-	-	-	-							
9	A-SP-VT1ØØ-W-Ø		INSTALLATION NOTES, WORD PROCESSING TERMINAL	-	-	-	-	-	-							
10		VT1ØØ-WC	TERM, VIDEO, FR. CANADIAN WP W/ 115V PLUG	-	-	-	-	-	-							
11		VT1ØØ-WD	TERM, VIDEO, FR. CANADIAN WP W/ 23ØV PLUG	-	-	-	-	-	-							
12		VT1ØØ-WE	TERM, VIDEO, FRENCH WP W/115V PLUG	-	-	-	-	-	-							
13		VT1ØØ-WF	TERM, VIDEO, FRENCH WP W/23ØV PLUG	-	-	-	-	-	-							
14		VT1ØØ-WG	TERM, VIDEO, DUTCH,WP W/115V PLUG	-	-	-	-	-	-							
15		VT1ØØ-WH	TERM, VIDEO, DUTCH,WP W/23ØV PLUG	-	-	-	-	-	-							
16		VT1ØØ-WJ	TERM, VIDEO, GERMAN WP W/115V PLUG	-	-	-	-	-	-							
17		VT1ØØ-WK	TERM, VIDEO, GERMAN WP W/23ØV PLUG	-	-	-	-	-	-							
18		VT1ØØ-WY	TERM, VIDEO, WP W/115V PLUG	-	-	-	-	-	-							

ECO NO.

"THIS DRAWING AND SPECIFICATIONS, HEREIN, ARE THE PROPERTY OF DIGITAL EQUIPMENT CORPORATION AND SHALL NOT BE REPRODUCED OR COPIED OR USED IN WHOLE OR IN PART AS THE BASIS FOR THE MANUFACTURE OR SALE OF ITEMS WITHOUT WRITTEN PERMISSION.
COPYRIGHT © 1978 DIGITAL EQUIPMENT CORPORATION"

TITLE SHIPPING LIST VT1ØØ

ASSY. NO. —#—

SIZE B | CODE PL | NUMBER VT1ØØ-Ø | REV. H

SECTION C1 OF C2 | SHEET 5 OF 6

DRB 125A

ML 3

digital PARTS LIST

DRN. D. HEALY DATE 14-JUN-78	DES. ENG. E. WEDEKING DATE 10-JUL-78	MFG. ENG. K. HOFFMAN DATE 10-JUL-78
CHK'D. D. HEALY DATE 14-JUN-78	RESP. ENG. E. WEDEKING DATE 10-JUL-78	NEXT HIGHER DOC. B-DD-VT1ØØ-Ø

NOTES:

SEE NOTE1, PAGE 1

ITEM NO.	DRAWING NO.	PART NO.	DESCRIPTION	VT1ØØ-BA	VT1ØØ-BB	VT1ØØ-CA	VT1ØØ-CB	VT1ØØ-DA	VT1ØØ-DB							REFERENCE DESIGNATORS
19		VT1ØØ-WZ	TERM, VIDEO, WP W/23ØV PLUG	-	-	-	-	-	-							
20		3615741-01	LABEL, SET-UP, VT1ØØ FOR SYSTEMS	-	-	-	-	-	-							
21		AA-H989A-TA	VT1ØØ FOREIGN LANGUAGE SUPPLEMENT	-	-	-	-	-	-							
22		VT1ØØ-LA	TERM, VIDEO, W/P4Ø TUBE	-	-	-	-	-	-							
23		VT1ØØ-LB	TERM, VIDEO, W/P4Ø TUBE	-	-	-	-	-	-							
24		VT1ØØ-PA	VT1ØØ-AA EXCEPT DARK GRAY 12ØV PRIVATE BRAND	-	-	-	-	-	-							
25		VT1ØØ-PB	VT1ØØ-AB EXCEPT DARK GRAY 24ØV PRIVATE BRAND	-	-	-	-	-	-							
26		VT1ØØ-PC	VT1ØØ-PA WITHOUT ELECTRONICS 12ØV PRIVATE BRAND	-	-	-	-	-	-							
27		VT1ØØ-PD	VT1ØØ-PB WITHOUT ELECTRONICS 24ØV PRIVATE BRAND	-	-	-	-	-	-							
28		VT1ØØ-PE	VT1ØØ-PA WITHOUT ELECTRONICS & NO KEYBOARD 12ØV PRIVATE BRAND	-	-	-	-	-	-							
29		VT1ØØ-PF	VT1ØØ-PB WITHOUT ELECTRONICS & NO KEYBOARD 24ØV PRIVATE BRAND	-	-	-	-	-	-							
30		EK-VT1ØØ-RC	VT1ØØ PROGRAM REF CARD	-	-	-	-	-	-							
31		3618307-05	BOOKLET, FCC STATEMENT, WITH POUCH	-	-	-	-	-	-							

ECO NO.

"THIS DRAWING AND SPECIFICATIONS, HEREIN, ARE THE PROPERTY OF DIGITAL EQUIPMENT CORPORATION AND SHALL NOT BE REPRODUCED OR COPIED OR USED IN WHOLE OR IN PART AS THE BASIS FOR THE MANUFACTURE OR SALE OF ITEMS WITHOUT WRITTEN PERMISSION.
COPYRIGHT © 1978 DIGITAL EQUIPMENT CORPORATION"

TITLE SHIPPING LIST VT1ØØ

ASSY. NO. —//—

SIZE B | CODE PL | NUMBER VT1ØØ-Ø | REV. H

SECTION C2 OF C2 | SHEET 6 OF 6

DRB 125A

ML3

This document contains confidential proprietary information of DEC. This information shall not be disclosed to persons other than DEC employees authorized by DEC, except by DEC personnel so authorized by DEC, and shall not be reproduced or used for any other purpose than that for which it is furnished by DEC.
Copyright © 1979 Digital Equipment Corporation.

DIGITAL EQUIPMENT CORPORATION
MAYNARD, MASSACHUSETTS

ENGINEERING SPECIFICATION

DATE 6/28/79

TITLE VT100-W Word Processing Terminals Installation Notes

REVISIONS

REV	DESCRIPTION	CHG NO	ORIG	DATE	APPD BY	DATE
A	ECO CHANGE	VT100-ML028	W.TREMBLAY	3/12/79	W. Tremblay (Ret)	11/1/80

The VT100 family of Word Processing Terminals consists of the basic VT100 terminal assembly to which, parts have been added or substituted to make unique terminals, dedicated to word processing applications in various languages.

Table 1 lists the unique parts make-up of the various VT100 Word Processing Terminals.

The VT100 incorporates a user set-up option which is activated by the set-up key on the keyboard. To maintain order among DEC Word Processing Systems using the VT100, a WORD PROCESSING STANDARD SET-UP had been defined. These settings are preset at the factory.

Table 2 shows the correct set-up B settings for VT100-WA and VT100-WB variations. Table 3 shows the correct settings for VT100-WC through VT100-WK, VT100-WY, and VT100-WZ .

Verify that the terminal is set-up correctly. If necessary, change incorrect settings then store the settings in the VT100's semi-permanent memory (Ref: VT100 User Guide EK-VT100-UG11).

Unique to the VT100 Word Processing Terminal is a Word Processing Advanced Video Module P/N 5413097-xx. Table 5 illustrates ROM and jumper placement for the various modules.

Also unique to the VT100 Foreign Word Processing Terminals is a language set-up mode called the set-up C mode. Table No. 4 explains how to use the set-up C mode to select any one of 5 different languages.

Table 1
Word Processing VT100 Unique Parts

Variation	Basic Unit	Unique Part	Part Number
VT100-WA	VT100-AA	Word Proc. Key Bd.	7015765-03
		Word Proc. Advanced Video Module	5413097-01
VT100-WB	VT100-AB	Word Proc. Key Bd.	7015765-03
		Word Proc. Advanced Video Module	5413097-01
VT100-WC		French Canadian Key Bd.	7015765-05
		For. Language Advanced Video Module w/ROM A	5413097-03
		Basic Video Board	5413009-02

ENG	APPD	SIZE	CODE	NUMBER	REV
Walt Tremblay	Don Young	A	SP	VT100-W	A

EN-1079A-16-R873-(392)
DRA 107A

SHEET 1 OF 8

Table 1 (continued)
Word Processing VT100 Unique Parts

Variation	Basic Unit	Unique Part	Part Number
VT100-WD		French Canadian Key Bd.	7015765-05
		For. Language Advanced Video Module w/ROM A	5413097-03
		Basic Video Board	5413009-02
VT100-WE		French Key Bd.	7015765-06
		For. Language Advanced Video Module w/ROM A	5413097-03
		Basic Video Board	5413009-02
VT100-WF		French Key Bd.	7015765-06
		For. Language Advanced Video Module w/ROM A	5413097-03
		Basic Video Board	5413009-02
VT100-WG		Dutch Key Bd.	7015765-07
		For. Language Advanced Video Module w/ROM A	5413097-03
		Basic Video Board	5413009-02
VT100-WH		Dutch Key Bd.	7015765-07
		For. Language Advanced Video Module w/ROM A	5413097-03
		Basic Video Board	5413009-02
VT100-WJ		German Key Bd.	7015765-08
		For. Language Advanced Video Module w/ROM A	5413097-03
		Basic Video Board	5413009-02
VT100-WK		German Key Bd.	7015765-08
		For. Language Advanced Video Module w/ROM A	5413097-03
		Basic Video Board	5413009-02
VT100-WY		Word Proc. Key Bd.	7015765-03
		For. Language Advanced Video Module w/ROM A	5413097-03
		Basic Video Board	5413009-02
VT100-WZ		Word Proc. Key Bd.	7015765-03
		For. Language Advanced Video Module w/ROM A	5413097-03
		Basic Video Board	5413009-02

Table 2
Word Processing User Option Set-up "B"

VT100-WA Set-up B

```
SET-UP B
TO EXIT PRESS "SET-UP"



1100  0101  0000  0010      T SPEED 9600  R SPEED 9600
```

SET-UP B mode may only be entered from SET-UP A mode. To enter SET-UP B from SET-UP A, press the 5 key on the main keyboard. The display will have a presentation similar to the figure shown above.

The table shown below explains the function of each bit and their proper setting.

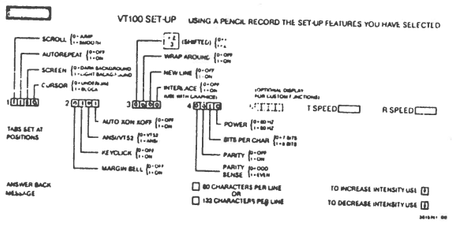

A

Table 2
Word Processing User Option Set-up "B"

VT100-WB Set-up B

```
SET-UP B
TO EXIT PRESS "SET-UP"



1100  0101  1000  0011      T SPEED 9600  R SPEED 9600
```

SET-UP B mode may only be entered from SET-UP A mode. To enter SET-UP B from SET-UP A, press the 5 key on the main keyboard. The display will have a presentation similar to the figure shown above.

The table shown below explains the function of each bit and their proper setting.

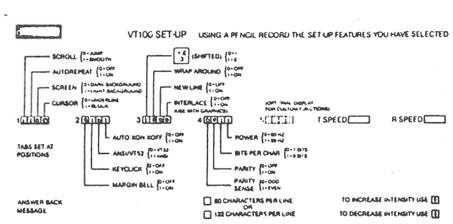

Table 3
Word Processing User Option Set-up "B"

VT100-WC-WK, WY, and WZ Set-up B

```
SET-UP B
TO EXIT PRESS "SET-UP"



1100  0101  0000  0001            P=80  T 9600  R 9600
```

NOTE: For WC and WD variations Group 4 should contain all zero's, unless 50 Hz, local echo and/or parity check is desired.

SET-UP B mode may only be entered from SET-UP A mode. To enter SET-UP B from SET-UP A, press the 5 key on the main keyboard. The display will have a presentation similar to the figure shown above.

The table shown below explains the function of each bit and their proper setting.

If the parity setting (P=?) is incorrect, it can be changed by holding the shift key down and pressing the P key repeatedly until the desired setting is displayed.

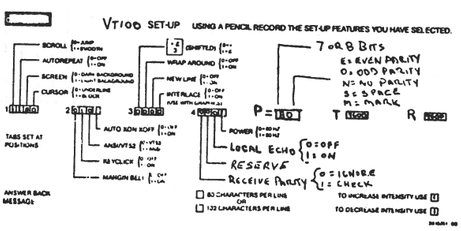

A

Table 4
Word Processing User Option Set-Up C

The SEt-up C mode for VT100 variatons -WC through WK, -WY and -WZ allows you to select any one of the following languages.

French Canadian
French
Dutch
German
English

SET-UP C mode may only be entered from SET-UP A mode. To enter SET-UP C from SET-UP A, press the 5 key on the main keyboard twice. The display will have a presentation similar to the figure shown below.

```
SET-UP C
TO EXIT PRESS "SET-UP"



DISPLAY ENGLISH            KEYBOARD ENGLISH
```

To change the language setting for the display and/or keybaord, advance the cursor until it is positioned above the incorrect language setting then press the number 6 key repeatedly until the desired language setting is displayed.

For terminals set-up for French all numbers (0-9) on the main keyboard are in the shifted position, therefore, they can only be accessed by holding the shift key down and then pressing the desired number key.

It is suggested that the "Caps Lock" key ("Shift Lock" in the French keyboard mode) be always engaged when doing set-up functions to eliminate confusion during set-up.

Table 5
Word Processing Adv. Video Module
ROM and Jumper Locations

VT100-WA & WB 5413097-01

```
*****************************************************************
+----------+-----------------------+-+
|          |     J1                | |
|          +-----------------------+ |
|                                    |
|          +W1+  <--  in             |
|          +--+                      |
|          +--+                      |
|          +--+  <-- out             |
|          +--+                      |
|          +--+                      |
|          +W7+  <--  in             |
|          +--+                      |
|          +--+                      |
|          +--+                      |
|                                    |
|          +--+                      |
|          +--+  <-- out             |
|                                    |
|          +--+  <-- out             |
|          +--+                      |
|                                    |
| +------+ +------+ +------+ +------+ |
| | E19  | |BLANK| |BLANK| |BLANK| |
| | 23-  | |      | |      | |      | |
| |069E2| |      | |      | |      | |
| | -00  | |      | |      | |      | |
| +------+ +------+ +------+ +------+ |
+-----------------------------------+
```


Table 5 (continued)
Word Processing Adv. Video Module
ROM and Jumper Locations

VT100-WC-WK, WY & WZ 5413097-03

```
*****************************************************************
+----------+-----------------------+-+
|          |     J1                | |
|          +-----------------------+ |
|                                    |
|          +--+  <-- out             |
|          +--+                      |
|          +--+                      |
|          +--+                      |
|          +--+  <--  in             |
|          +W6+                      |
|          +--+                      |
|          +--+                      |
|          +--+  <-- out             |
|          +--+                      |
|                                    |
|          +--+                      |
|          +--+  <-- out             |
|                                    |
|          +--+  <-- out             |
|          +--+                      |
|                                    |
| +------+ +------+ +------+ +------+ |
| | E19  | |BLANK| |BLANK| |BLANK| |
| | 23-  | |      | |      | |      | |
| |093E2| |      | |      | |      | |
| | -00  | |      | |      | |      | |
| +------+ +------+ +------+ +------+ |
+-----------------------------------+
```

THIS DRAWING AND SPECIFICATIONS, SIGNAL, AND THE PROPERTY OF DIGITAL EQUIPMENT CORPORATION AND SHALL NOT BE REPRODUCED OR COPIED OR USED IN WHOLE OR IN PART AS THE BASIS FOR THE MANUFACTURE OR SALE OF ITEMS WITHOUT WRITTEN PERMISSION. COPYRIGHT © DIGITAL EQUIPMENT CORPORATION

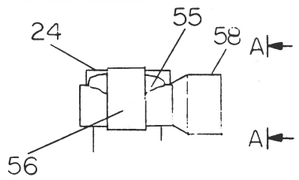

DETAIL A
SCALE: NONE

VIEW A-A

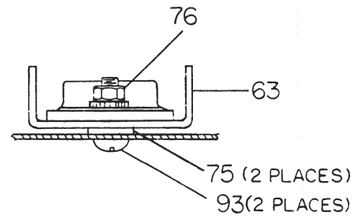

VIEW B - B

TRANSISTORS BOTTOM VIEW

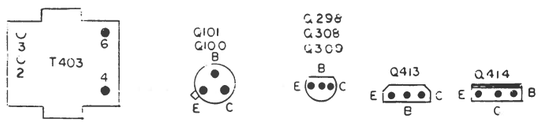

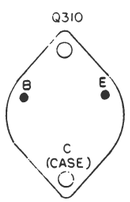

COMPONENT SIDE VIEW

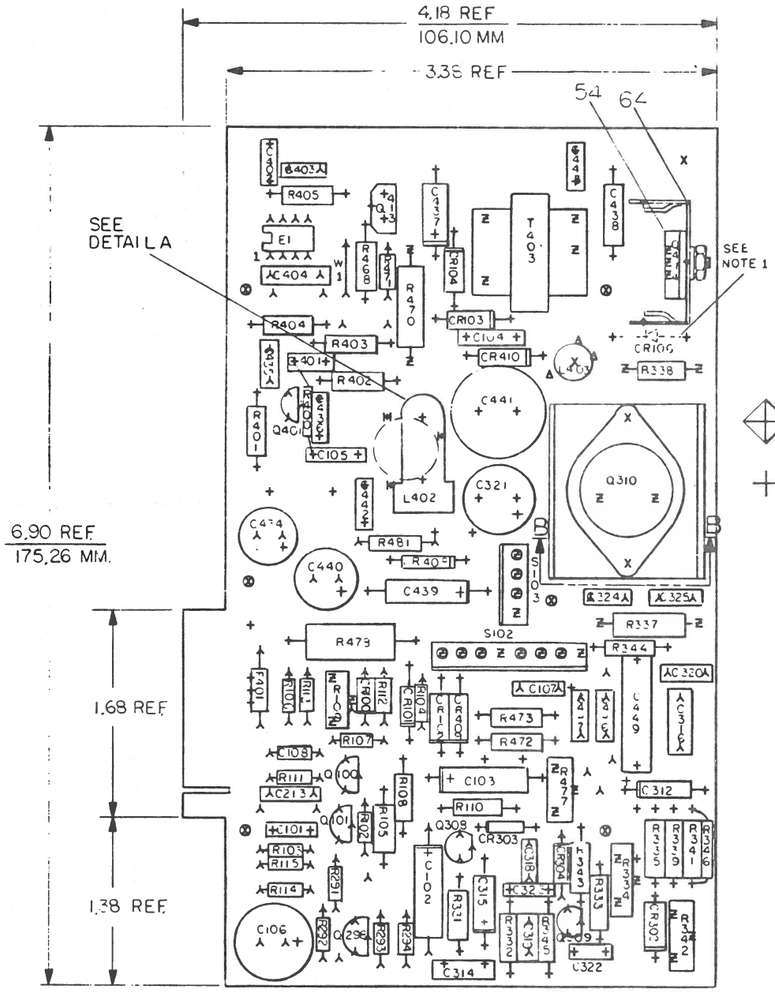

AUTOMATED BY PRTLST.3P(44)

P A R T S L I S T

LINE	ITEM	DOCUMENT NUMBER	PART NUMBER	DESCRIPTION	QTY PER VARIATION 00	01	REFERENCE DESIGNATOR
1	1	E-MD-5014130-0-0	5014130-00	DRILLED AND ETCH BOARD FOR VT100	1	1	
2	2		1016544-00	.1 MFD 100V 10% MYLR	2	2	C107,C442
3	3		1016546-00	.22 MFD 660V 10% MET. MYLR	1	1	C449
4	4		1016569-00	.0022 MFD 100V 10% MYLR	2	2	C436,C402
5	5		1016639-00	.01 MFD 200V 10% MYLR	1	1	C320
6	6		1016547-00	.022 MFD 200V 10% MYLR	1	1	C438
7	7		1016548-00	1000 MFD 16V +50-10% AL EL	1	1	C321
8	8		1010274-02	1 MFD 50V +80-20% CER	1	1	C443
9	9		1016555-00	22 MFD 50V +50-10% AL EL	2	2	C102,C103
10	10		1016496-00	4.7MFD 35V 20% S.TANT	2	2	C318,C319
11	11		1016554-00	75 MFD 6V +75-10% AL EL	1	1	C439
12	12		1016553-00	4.7MFD 25V +75-10% AL EL	2	2	C312,C437
13	13		1016558-00	10 MFD 25V 20% AL EL	1	1	C441
14	14		1016557-00	470 MFD 16V +50-10% AL EL	3	3	C106,C434,C440
15	15		1016556-00	.05 MFD 100V +80-20%Z5U DISC	3	3	C213,C314,C404
16	16		1016570-00	.001 MFD 500V +80-20%Z5U DISC	2	2	C435,C403
17	17		1016571-00	.02 MFD 500V +80-20%Z5U DISC	4	4	C104,C105,C486,C487
18	18		1016572-00	300.0 MMF 500V 10% X5F DISC	1	1	C101
19	19		1000004-00	.02 MFD 100V 20% Z5U DISC	4	4	C322,C323,C324,C325
20	20		1116474-00	1N 4007 PIV=1000 I=1A DO41	4	4	CR101,CR102,CR103,CR104
21	21		1116477-00	1N 4156 PIV= 20 DO35	1	1	CR304
22	22		1114892-00	1N 4747A VZ= 20.0 5% 1W	1	1	CR410
23	23		1116476-00	PIV=400	1	1	CR408
24	24		1216530-04	MAGNET,PINCUSHION 10 GAUSS	1	1	
25	25	SEE NOTE	1003053-00	.047 MFD 250V 20% MET. MYLR	1	1	C316
26	26		1316522-00	2.50 K .25 W20.0 % POT	1	1	R342
27	27		1316522-02	5.0 M .25 W20.0 % POT	1	1	R477
28	28		1316522-01	100.0 K .25 W20.0 % POT	1	1	R109
29	29		1317528-00	39.0 2.0 W10.0 % CC	1	1	R470
30	30		1300479-00	10.0 K .25 W 5.0 % CF	1	1	R291

REVISION HISTORY			BASIC PART NO: 5414131			
ENG	ECO NUMBER	REV	SECTION A OF A	DRN: KENT GLEEZEN	DATE: 24-MAR-81	D I G I T A L
	INITIAL	P	SECTION.VARIATION INDEX	CHK'D: KENT GLEEZEN	DATE: 24-MAR-81	TITLE PARTS LIST
DP	5414131-ML007	R	[A] 00,01			VT100 MONITOR
DP	5414131-ML008	S	[B]	DES.ENG: DICK PUCCI	DATE: 24-MAR-81	
CT	5414131-ML010	T	[C]			
WB	5414131-ML011	U	[D]			
			[E]	RESP.ENG.: DICK PUCCI	DATE: 24-MAR-81	DOCUMENT NUMBER
			[F]			
			[H]			SIZE / CODE / NUMBER / REV
			[J]	MFG.ENG.: AL JOHNS	DATE: 24-MAR-81	K / FL / 5414131-0-DBP / U
			[K]			
			[L]			
			[M]	ASSEMBLY NUMBER: D-UA-5414131-0-0	TOP DOCUMENT NUMBER: B-DD-5414131-0-0	FILE NAME: Z2387U.PLS / EDIT # 15
			[N]			

"THIS DRAWING AND SPECIFICATIONS HEREIN, ARE THE PROPERTY OF DIGITAL EQUIPMENT CORPORATION AND SHALL NOT BE REPRODUCED OR COPIED OR USED IN WHOLE OR IN PART AS THE BASIS FOR THE MANUFACTURE OR SALE OF ITEMS WITHOUT WRITTEN PERMISSION.
COPYRIGHT (C) 1982, DIGITAL EQUIPMENT CORPORATION "

LINE	ITEM	DOCUMENT NUMBER	PART NUMBER	DESCRIPTION	QTY PER VARIATION 00	01	REFERENCE DESIGNATOR
31	31		1300445-00	4.70 K .50 W 5.0 % CF	1	1	R331
32	32		1316504-00	68.0 K .50 W 5.0 % CF	1	1	R332
33	33		1300385-00	1.20 K .50 W 5.0 % CF	1	1	R344
34	34		1316506-00	100.0 K .50 W 5.0 % CF	2	2	R472,R473
35	35		1316508-00	5.60 K .50 W 5.0 % CF	1	1	R338
36	36		1316509-00	*** THIS ITEM IS NOT USED ***	-	-	
37	37		1302396-00	150.0 K .25 W 5.0 % CF	1	1	R106
38	38		1300228-00	100.0 .50 W 5.0 % CF	2	2	R481,R343
39	39		1300364-00	1.0 K .50 W 5.0 % CF	1	1	R468
40	40		1300296-00	330.0 .50 W 5.0 % CF	1	1	R345
41	41		1300356-00	820.0 .50 W10.0 % CF	1	1	R108
42	42		1300461-00	6.80 K .50 W 5.0 % CF	1	1	R339
43	43		1300440-00	3.30 K .50 W 5.0 % CF	1	1	R110
44	44		1300496-00	15.0 K .25 W 5.0 % CF	1	1	R107
45	45		1300274-00	220.0 .50 W 5.0 % CF	1	1	R105
46	46		1300285-00	*** THIS ITEM IS NOT USED ***	-	-	
47	47		1316525-00	1.0 3.0 W10.0 % WW	1	1	R478
48	48		1509525-00	2N 3906 PNP 310MW SI 40100 Y	1	-	Q298
			CONT		-	2	Q298,Q100
49	49		1516492-00	2N 5830 NPN 1W SI100 1	1	1	Q101
50	50		1509524-00	2N 3904 NPN 310MW SI 40 40 M	2	2	Q308,Q401
51	51		1516491-00	2N 6427 NPN 1.5W SI 40 1.5	1	1	Q309
52	52		1516532-00	NPN 125W SI250 25	1	1	Q310
53	53		1516490-00	MPSU05 NPN 10W SI	1	1	Q413
54	54		1517534-00	BU 407D NPN POWER TRANS T0220	1	1	Q414
55	55		4901303-00	WAX	A/R	A/R	
56	56		9107685-00	TUBING,SHRINK .500ID EXP	A/R	A/R	
57	57		1616309-00	XFMR,HORIZONTAL DRIVE	1	1	T403
58	58		1616538-00	COIL,HORIZONTAL,LINEAR	1	1	L402
59	59		1616536-00	XFMR HORIZONTAL WIDTH	1	1	L403
60	60		1210929-05	FUSE, SUB-MINI, 2.500A, 125V, A	1	1	F401
61	61		1216521-01	PCB,HEADER 08PIN(1X08).156CC STR	1	1	S102
62	62		1216521-00	PCB,HEADER 04PIN(1X04).156CC STR	1	1	S103
63	63		1216471-00	HEAT SINKS,TO-3/TO-66 1.531X1.25	1	1	
64	64		1217561-00	HEAT SINKS,TO-220 1.390X1.00	1	1	
65	65		4901304-00	COMPOUND, SILICONE THERMAL, VISC	A/R	A/R	
66	66		9006022-01	*** THIS ITEM IS NOT USED ***	-	-	
67	67		1001776-00	1 MFD 35V 10% S.TANT	1	1	C315
68	68		1304837-00	*** THIS ITEM IS NOT USED ***	-	-	
69	69		1300315-00	470.0 .50 W 5.0 % CF	1	1	R401
70	70		1300415-00	2.20 K .50 W 5.0 % CF	2	2	R402,R403
71	71		1300443-00	3.90 K .50 W 5.0 % CF	1	1	R404
72	72		1300467-00	7.50 K .50 W 5.0 % CF	1	1	R405
73	73		1000042-00	1000.0 MMF 100V 5%200PPM MICA	1	1	C401
74	74		1911944-00	555CN TIMER,FUNCT.BLOCK	1	1	E1
75	75		9006659-00	WASHER,FLAT STEEL	2	2	
76	76		9008185-00	NUT,HEX EXT TOOTH LCKWSHR 6-32	3	3	
77	77		1300197-00	33.0 .25 W 5.0 % CF	1	1	R471

LINE	ITEM	DOCUMENT NUMBER	PART NUMBER	DESCRIPTION	QTY PER VARIATION 00	01	REFERENCE DESIGNATOR
78	78		1300432-00	3.0 K .25 W 5.0 % CF	1	1	R400
79	79		1300439-00	3.30 K .25 W 5.0 % CF	1	1	R104
80	80		1301775-00	820.0 .25 W 5.0 % CF	1	1	R293
81	81		1300295-00	330.0 .25 W 5.0 % CF	1	1	R294
82	82		9107776-99	WIRE(WRAP) 22AWG IPVC UL14	A/R	-	
83	83		9009185-00	JUMPER, WIRE, INSULATED, BLACK B	1	1	W1
84	84		1302602-00	56.0 .25 W 5.0 % CF	2	-	R102,R103
			CONT		-	1	R103
85	85		1300250-00	150.0 .25 W 5.0 % CF	-	1	R102
86	86		1300316-00	470.0 .25 W 5.0 % CF	-	1	R111
87	87		1302395-00	56.0 K .25 W 5.0 % CF	-	1	R112
88	88		1302092-00	220.0 K .25 W 5.0 % CF	1	1	R113
89	89		1312930-00	5.10 K .25 W 5.0 % CF	1	-	R292
			CONT		-	3	R292,R114,R115
90	90		1001610-00	.01 MFD 50V +80-20% Z5U CER	-	1	C108
91	91		1116475-00	1N 4148 PIV= 75 D035	2	-	CR302,CR303
			CONT		-	3	CR302,CR303,CR100
92	92		1111854-01	MR 817 PIV=800 I= 1A D041 S	1	1	CR409
93	93		9006023-01	SCREW,MACH PAN PHIL 6-	2	2	
94	94		1316522-06	25.0 K .25 W20.0 % POT	1	1	R334
95	95		1301327-00	68.0 K .25 W 5.0 % CF	1	1	R335
96	96		1319255-06	12.0 1.0 W 5.0 % M.OXIDE	1	1	R337
97	97		1301732-00	620.0 .50 W 5.0 % CF	1	1	R341
98	98		1309785-00	300.0 2.0 % NTC THERM	1	1	R346
99	99		1300478-00	10.0 K .50 W 5.0 % CF	1	1	R333

100 NOTE: P/N 1000051-00 CAN BE USED AS AN ALTERNATE FOR P/N 1003053-00.

D	I	G	I	T	A	L	TITLE	SIZE	CODE	DOCUMENT NUMBER	REV
							VT100 MONITOR	K	PL	5414131-0-DBP	U
							SECTION A OF A				

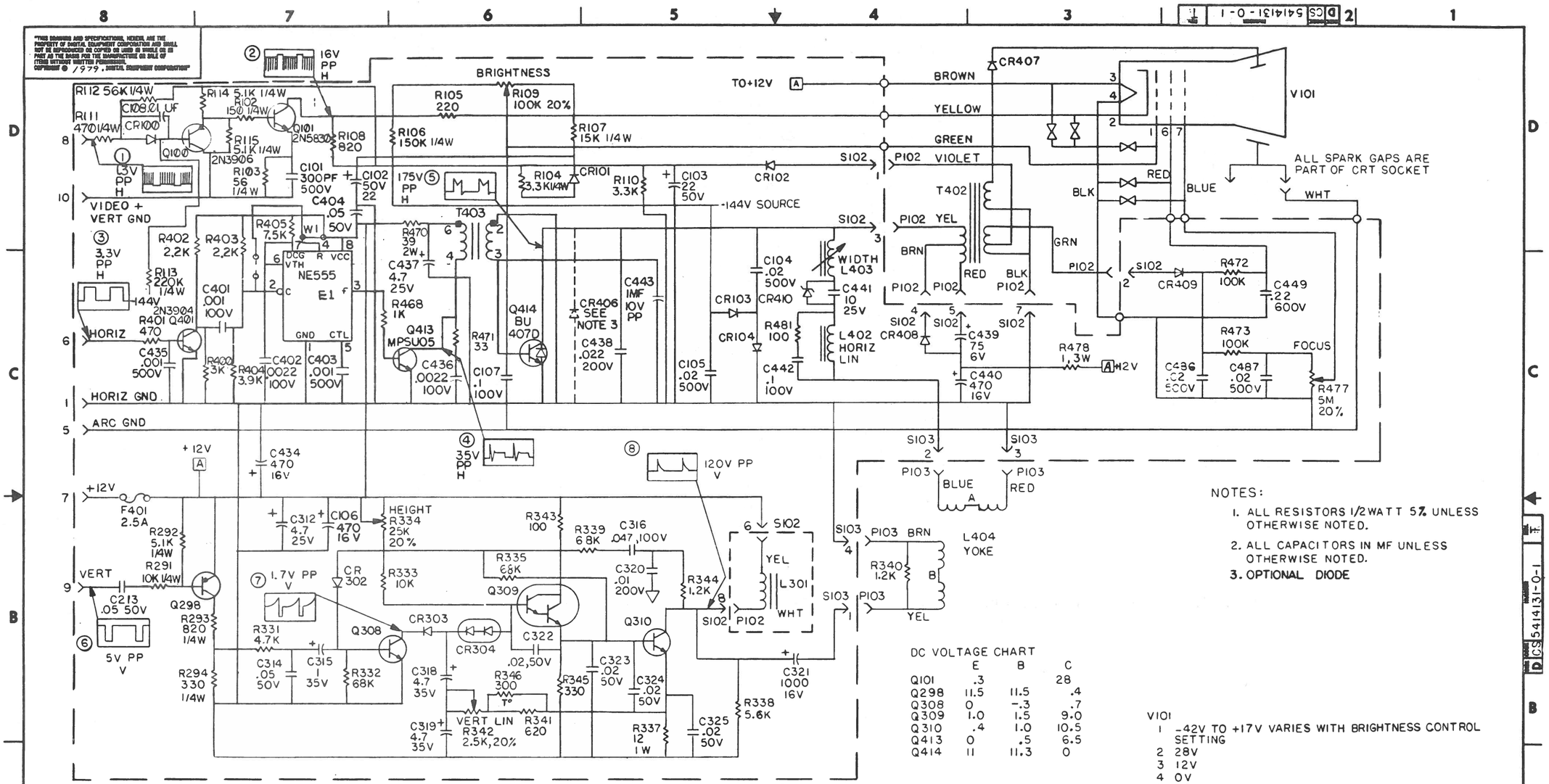

NOTES:

1. ALL RESISTORS 1/2 WATT 5% UNLESS OTHERWISE NOTED.
2. ALL CAPACITORS IN MF UNLESS OTHERWISE NOTED.
3. OPTIONAL DIODE

DC VOLTAGE CHART

	E	B	C
Q101	.3		28
Q298	11.5	11.5	.4
Q308	0	-.3	.7
Q309	1.0	1.5	9.0
Q310	.4	1.0	10.5
Q413	0	.5	6.5
Q414	11	11.3	0

V101
1 -42V TO +17V VARIES WITH BRIGHTNESS CONTROL SETTING
2 28V
3 12V
4 0V
5 NC
6 +365V
7 0V TO +360V VARIES WITH FOCUS CONTROL SETTING
2ND ANODE 12KV

REVISIONS				
CHG.	CHANGE NO.	REV.		
5414131-ML001	H	C. JAMES		
5414131-ML002	K	R. PUCCI		
5414131-ML003	L	R. PUCCI		
5414131-ML004	M	R. PUCCI		
5414131-ML005	N	R. PUCCI		
5414131-ML006	P	R. PUCCI		
5414131-ML007	R	R. PUCCI		
5414131-ML008	S	R. PUCCI		
5414131-ML011	T	W. BLOMSTER		

DRN.		1 MAR 75
CHK'D		
ENG.		
PROJ. ENG.		
PROD.		
NEXT HIGHER ASSY.	D-UA-5414131-0-0	
SCALE		
SHEET 1 OF 1		

FIRST USED ON VT100

digital

TITLE VT100 MONITOR

SIZE	CODE	NUMBER	REV.
D	CS	5414131-0-1	T

DIST.